Orientalmotor

Brushless DC Motors

BLH Series

NEW Electromagnetic Brake Motor
RS-485 Communication Type Driver

Improved DC Input drivers with increased functionality and performance

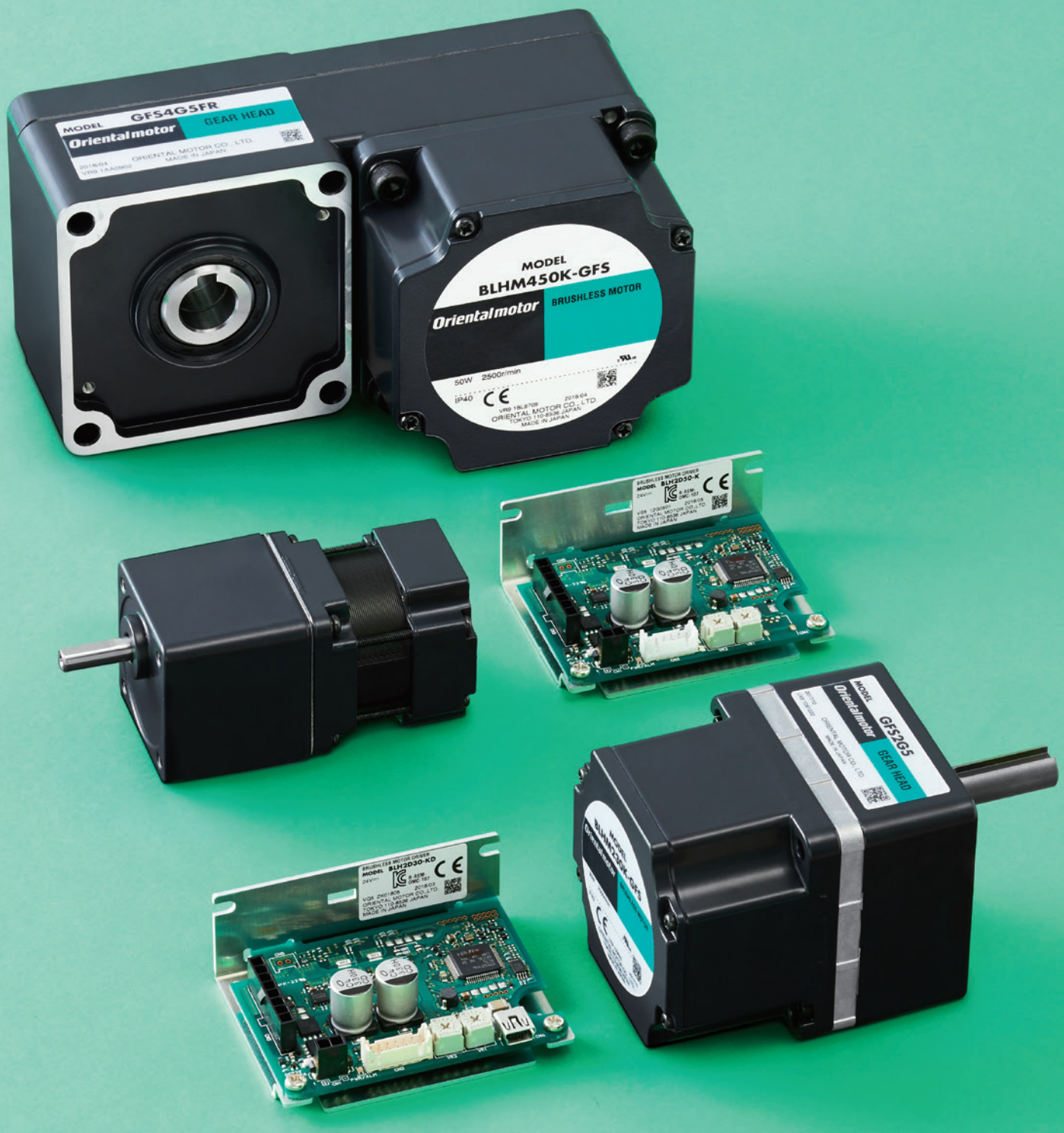

Excellent performance just as it is.

The redesigned **BLH** Series has a lineup of motors with electromagnetic brake and RS-485 communication type drivers.
The line-up and functions are further enhanced to support customer convenience.

NEW Electromagnetic Brake Motor

▶ Page 8

NEW RS-485 Communication Type Driver

▶ Page 6

The Versatile BLH Series

- Speed range **80 to 3000 r/min***
- Maximum of **8** speed settings*
- Quieter: **13 dB quieter than before**
- **Torque limiting** and **deceleration stop** are supported*
- Operation data can be set from **PC** or **host system***
- Monitor operating status **in real time***

*Using **MEXE02** support software and digital setting type driver.

3 Driver Types to Choose From

Motor

- Output power 15 W / 30 W / 50 W / 100 W
- Motor Type Standard Type / Electromagnetic Brake Type NEW
- Shaft Types: Parallel Shaft Gearhead / Hollow Shaft Flat Gearhead / Round Shaft

Driver

Analogue Setting Type

- Compatible with the existing **BLH** product range
- Increased performance (Higher torque, reduced audible noise)
- For output power 15 W / 30 W / 50 W / 100 W

Digital Setting Type

- Compatible with the existing **BLH** product range
- Increased performance (Higher torque, reduced audible noise)
- Increased functionality with **MEXE02** support software
- For output power 15 W / 30 W / 50 W

RS-485 Communication Type NEW

- Supports RS-485 communication (Modbus protocol)
- Easy to write and copy data to multiple drive.
- Reduced equipment wiring
- Compatible with **MEXE02** support software
- Supports remote monitoring via host system
- For output power 15 W / 30 W / 50 W

Compact, Lightweight Drivers

Compact, lightweight drivers that are smaller than a business card.

Actual Size

100 W Driver

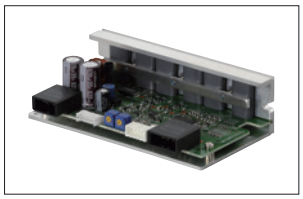

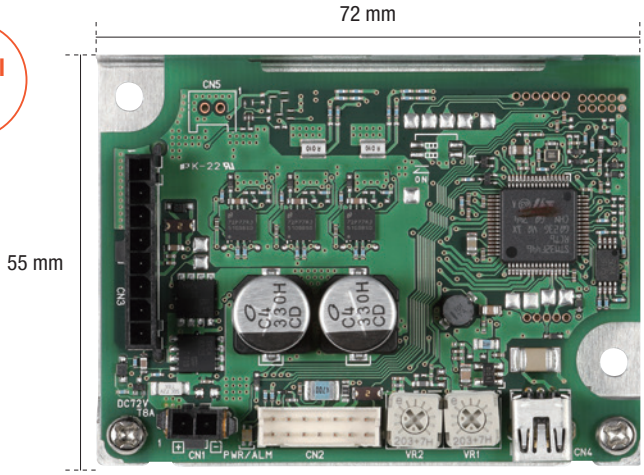

Mass 46 g

• Pictured: 15 W / 30 W / 50 W driver.

Increased Performance and Value with New Drivers.

Reduced Product Cycle Time

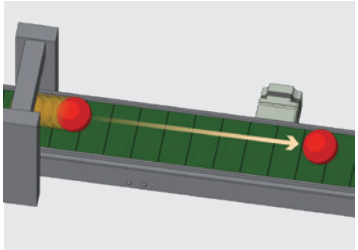

•Faster starting time with increased torque
•Stop at the rate set with deceleration stop
(Digital setting type / RS-485 Communication type)

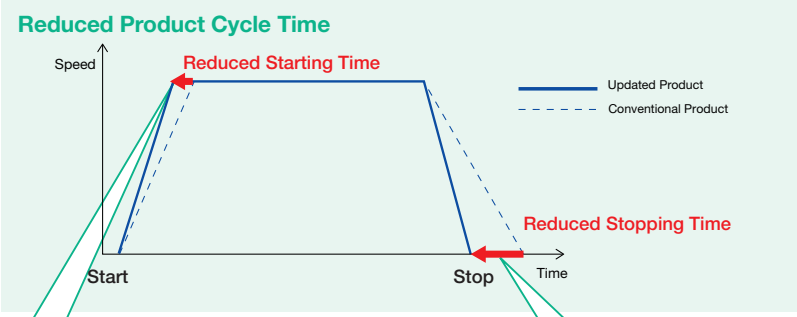

▶ Increased Torque (30 W, 50 W)

Max. instantaneous torque:
1.5 times the rated torque
The continuous duty region can be exceeded for a limited time, making the **BLH** Series ideal for applications that require high torque in high speed areas. The machine's product cycle time can be shortened by applying the maximum instantaneous torque 1.25 to 1.5 times higher than the conventional model.

Speed range:
100 to 3000 r/min (Analogue setting)
80 to 3000 r/min (Digital setting)

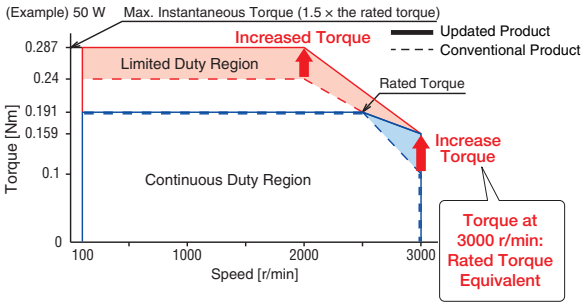

▶ Deceleration Stop

(Digital setting type / RS-485 Communication type)

In addition to the acceleration time setting, these types of driver are equipped with a deceleration stop function to stop in the set deceleration time.
Product cycle time can be reduced more than passive stopping with the conventional type.

Suitable for Applications in Quiet Environments

▶ Reduced Audible Noise

Noise is approx. half that of conventional products
• 30 W with parallel shaft gearhead Gear ratio of **5**
• Measurement of noise: OA value

Noise value approx. 44 dB
(Reduced by approx. 13 dB)

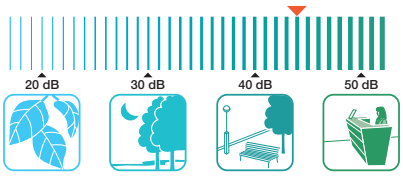

The sound of leaves rustling
The second hand of a clock
The suburbs at night
A whisper
A quiet park
A library
A quiet office
An air conditioner (outdoor unit)

The **BLH** Series uses a sinusoidal drive method. With little torque ripple and smooth, stable rotation even at low speeds, the motor's audible volume is reduced.

Synchronized Operation and Operation with Minimal Speed Fluctuation

▶ Synchronized Operation

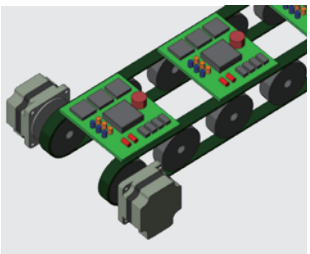

• With digital settings, speeds can be set at 1 rpm increments.
The speed accuracy is improved, and synchronized operations are made possible.

▶ Speed Stability

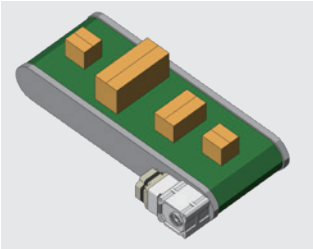

•Speed remains stable even if the weight of the load changes (Speed regulation ±0.2 % max.)

•Speed Regulation

Speed Setting Method \ Driver Type	Analogue Setting Type	Digital Setting Type RS-485 Communication Type
Analogue Setting	±0.5% max.	
Digital Setting	—	**±0.2% max.**
PWM Input Setting	—	±0.5% max.

This is a demo of an Automated Guided Vehicle (AGV) using the **BLH** Series.
You can see the synchronization and high level of response.

Startup and Maintenance with Digital Settings and Support Software.

Equipment Startup Assistance

▶ Teaching and Remote Operation

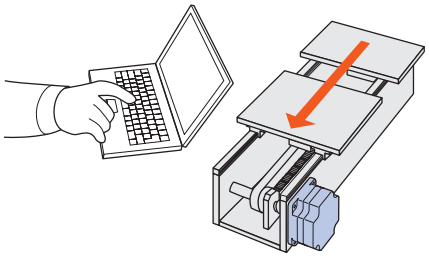

Operation data can be set up on your computer.
This makes it possible to create a motion profile without being connected to the machine's motion control system, then save the operation data in place.

▶ Operating Data Duplication

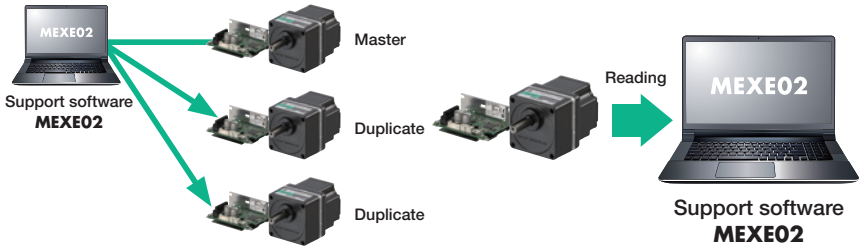

When using multiple units, the operation data used in the first unit can be treated as a master file, and duplicated into subsequent units. Helping to reduce setup time.

Predictive Maintenance with Visualization

What is predictive maintenance? By constantly monitoring the status of the motor and performing maintenance when signs of change are observed, machine down time can be avoided.

▶ Status Monitoring

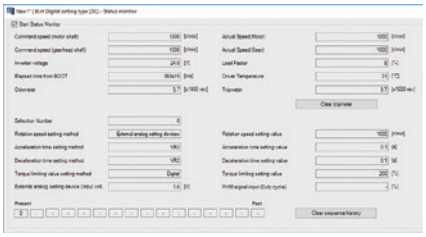

The load factor, driver temperature, and other conditions can be constantly checked.

▶ Information Monitoring

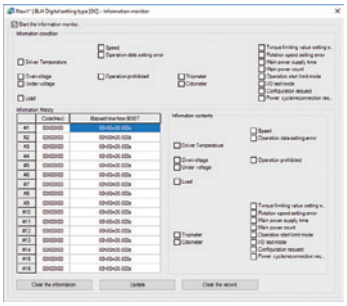

Output signals can be set to trigger at preset thresholds, showing that periodic maintenance is now due.

▶ Alarm Monitoring

(When an abnormality occurs)

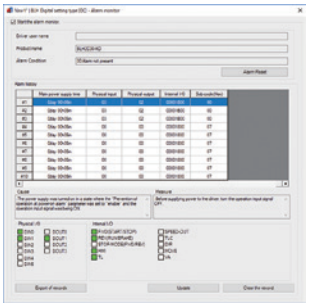

Alarm information can also be monitored.
The cause of the alarm is listed, with suggested solutions to resolve the problem. There is also a history record of any previous alarms.

Torque Adjustment

▶ Torque Limiting Function

What is torque limiting? It is a limiting function that suppresses the motor's torque by limiting the current to the motor.

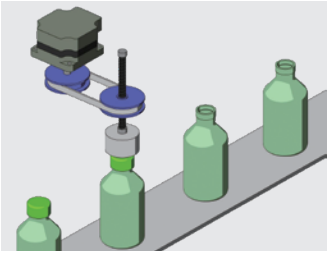

- Adjust tightening force, etc.
- Damage prevention (Low thrust)
- Load factor monitoring is possible

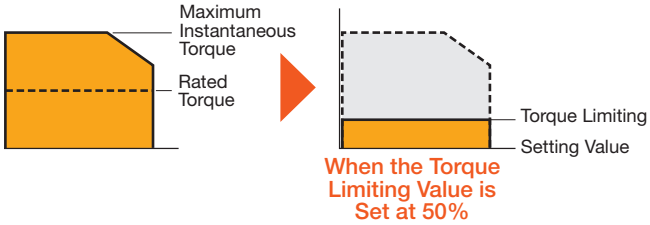

- As well as tightening applications, torque limiting can also be used as a safety measure.
- Status monitoring can be used to highlight when the operating status of the motor deviates from the normal range. Increased torque requirement from wear and tear, or pinching, can be flagged to help prevent damage to machinery.
- The max. instantaneous torque range can be set between 0% and 200% of the rated torque of the motor.

Central Control and Batch Setting Via Network Communication. NEW

RS-485 Communication Type Driver

RS-485 communication can be used to set operating data and parameters, as well as input operation commands. Thanks to support for the Modbus (RTU) protocol, control via connection to a panel computer or a programmable controller is possible.

*Operation command input can also be performed via I/O, which is useful for setting during startup.

Motor　Driver　Operating Data Setting Parameter Changes

Reduced Wiring and Easy Setting & Modification of Operating Data

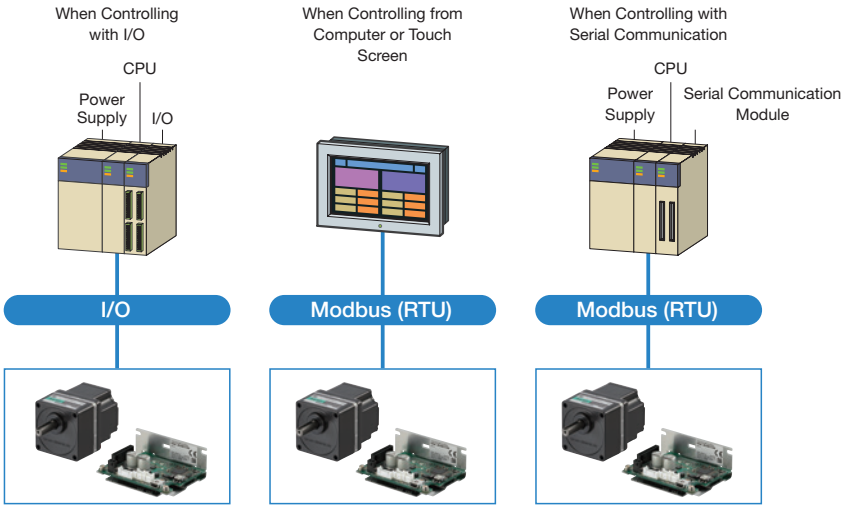

▶ Benefits & More

- Operating data, such as speed and torque control values, can be easily amended.
- Simultaneous multi-axis setting of operating data and parameters.
- Remote I/O and serial communication help to reduce wiring.

Continuous Remote Monitoring

Because the status of each driver can be monitored by serial communication, it is possible to remotely observe the motor and driver conditions on a continuous basis.

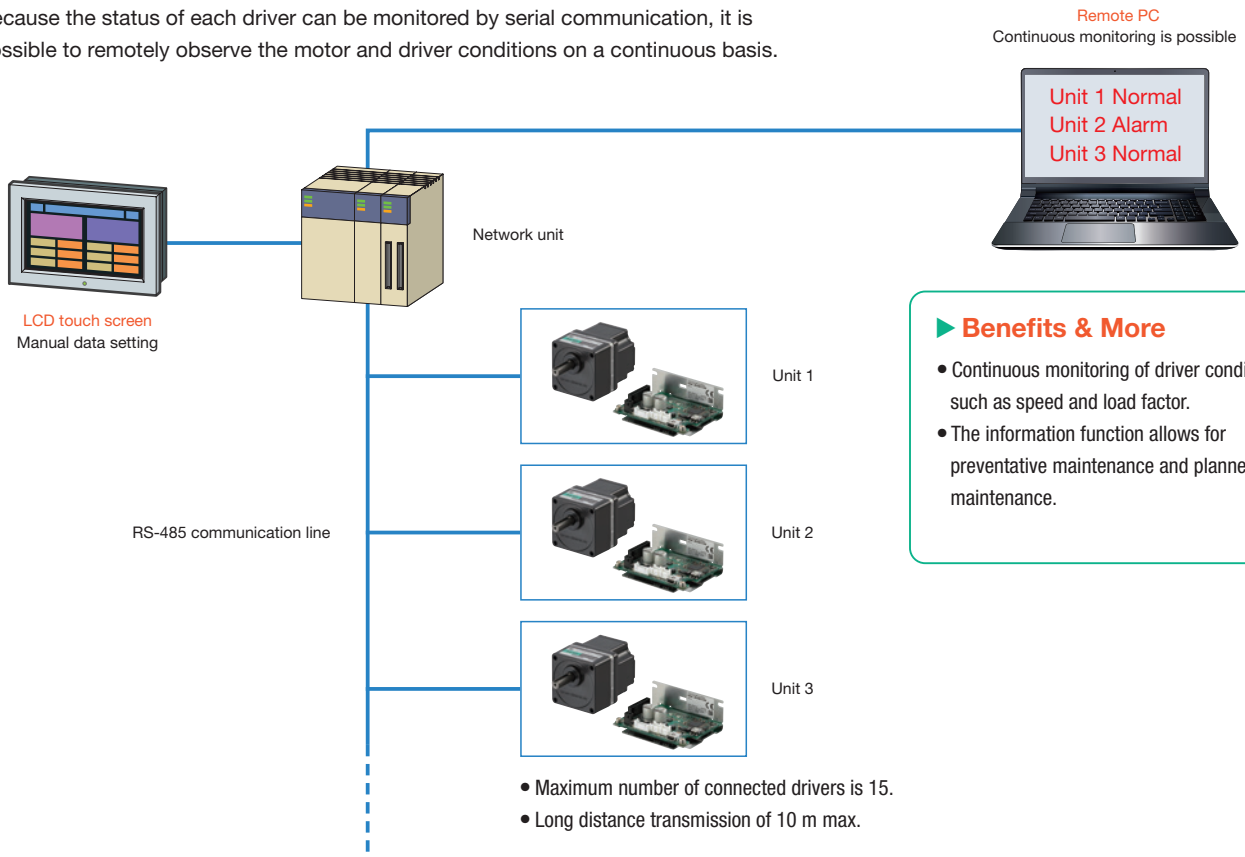

- Maximum number of connected drivers is 15.
- Long distance transmission of 10 m max.

▶ Benefits & More

- Continuous monitoring of driver conditions, such as speed and load factor.
- The information function allows for preventative maintenance and planned maintenance.

Choose From 3 Types Based on Setting Method and Functions

Operating Data Setting

With the digital settings type, you can set up to 8 different sets of operation data (speed of rotation, torque limit value, acceleration time, deceleration time).

▶ Setting Method

Setting Item \ Setting Method		Digital Setting		External Analogue Potentiometer		Internal Potentiometer (Driver)		PWM Input
		Support software **MEXE02**	RS-485 communication	External speed potentiometer	External DC voltage	VR1	VR2	PWM signal
Speed	Analogue setting type	-	-	●	●	●	-	-
	Digital setting type	●	-	●	●	●	●	●
	RS-485 communication type	●	●	●	●	-	-	●
Acceleration / Deceleration Time	Analogue setting type	-	-	-	-	-	●	-
	Digital setting type	●	-	-	-	●	●	-
	RS-485 communication type	●	●	-	-	-	-	-
Torque Limiting	Analogue setting type	-	-	-	-	-	-	-
	Digital setting type	●	-	●	●	●	●	●
	RS-485 communication type	●	●	●	●	-	-	●

Functions List

Function		Analogue Setting Type	Digital Setting Type/RS-485 Communication Type
①	Digital Speed Indicator	● Pulse signals can be converted to an external device	● Monitoring function of the **MEXE02** support software
②	Instantaneous Stop	●	●
③	Acceleration / Deceleration Time Setting	● 0.1 to 12.0 seconds*1	● 0.1 to 15.0 seconds (Individual settings)
④	Multistep Speed-Change Operation	●	●
⑤	Parallel-Motor Operation	●	●
⑥	Protective Function	●	●
⑦	Torque Limiting	-	●
⑧	Speed Upper and Lower Limit Setting	-	●
⑨	Shock Alleviation Filter	-	●
⑩	I/O Signal Assignment	-	●
⑪	I/O Signal Operation Selection	-	●
⑫	Overload Alarm Detection Time Setting	- Fixed at 10.0 seconds*2	● 0.1 to 10.0 seconds
⑬	Prevention of Operation at Power-on Alarm	-	●
⑭	Various Information Detection	-	●

*For ⑦ to ⑭, when using the **MEXE02** support software and digital setting type and RS-485 communication type driver.
*1 0.5 to 10.0 seconds for 100 W
*2 Fixed at 5.0 seconds for 100 W

A Wide Range of Options

Product Line

Motor, driver, connection cables (flexible connection cables), and cable sets (power supply cable, I/O signals cable) sold separately.

■Motor

Output Shaft Type	Electromagnetic Brake	Output [W]	Frame Size [mm]	Gear Ratio
Parallel Shaft Gearhead **GFS** Gear*1 	–	15	42	**5**, **10**, **15** **20**, **30**, **50** **100**, **200** •15 W does not have a gear ratio of **200**
	NEW 	30	60	
		50	80	
		100	90	
Hollow Shaft Flat Gearhead **FR** Gear 	NEW 	30	60	
		50	80	
		100	90	
Round Shaft Type 	–	15	42	–
		30	60	
		50	80	
		100	90	

*1 The 15 W geared motor has an integrated motor and gearhead.
*2 Power supply cable and I/O signal cable are included with the 100 W driver.

+

■Driver

Output [W]	Type
15	Analogue Setting Type 
30	
50	
100*2	
15	Digital Setting Type 
30	
50	
15	NEW RS-485 Communication Type 
30	
50	

+

■Cable

Connection Cable Flexible Connection Cable
 1.5 m

■Cable Sets

Power Supply Cable
 300 mm NEW 1000 mm
Cable for I/O Signals
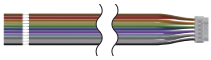 300 mm NEW 1000 mm

Stop and Hold Using Electromagnetic Brake NEW

▶ Able to hold position in horizontal applications

- The stop position can be maintained when equipment needs to be stationary to load and unload or process work pieces.
- Holds the load when an unexpected event such as a power failure occurs.

Holding with brake

- Cannot be used for vertical drive applications such as gravitational operation.
- Customer must provide the electromagnetic brake control.

▶ Confirm motor is stopped by MOVE output

- With the digital setting type and RS-485 communication type, you can use the MOVE output to check the timing for turning off the electromagnetic brake.

- Before holding the load with the electromagnetic brake, ensure that the motor has stopped. Using the brake during rotation may damage the product.
- The analogue setting type does not have a MOVE output. To detect rotation, it is necessary to install an external sensor.

Features of Brushless DC Motors

Brushless DC motors have slim bodies and provide high output and high efficiency due to built-in permanent magnets. The built-in sensors (Hall IC) constantly monitor the motor's speed. No matter the load conditions, feedback control is carried out at all times so that the command speed and actual speed remain consistent.

Speed Stability with Feedback Control

Brushless DC motor drivers compare the set speed with the speed feedback signals from the motor at all times and adjust the motor's applied voltage. Speed is kept stable over the entire speed range from low to high even when the load fluctuates.

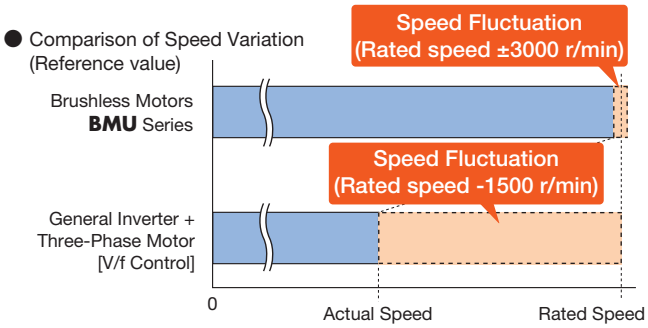

IE4-equivalent* High-Efficiency and Energy-Saving Motor

Brushless DC motors are higher efficiency than single and three phase induction motors. For example, the efficiency of the 200 W **BMU** Series motor and driver is increased to 86%, and the IE4 standard is increased to 75.8%, contributing to energy-saving requirements.

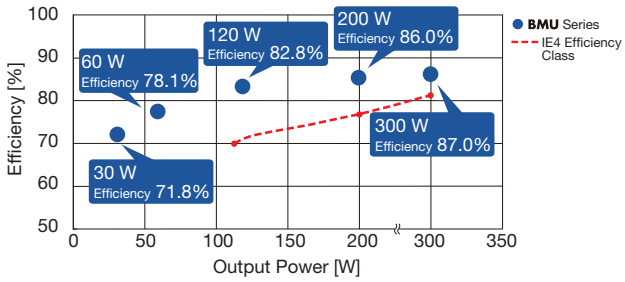

*Induction motors 120 W and higher are subject to the efficiency classes under the international standard IEC 60034-30-1.

*IE4 efficiency values are at 50 Hz and 1500 r/min, while brushless motor efficiency values are at rated speed.

Broad Speed Control Range and even Torque

Rated torque is consistent over the entire speed range from low to high. In contrast to a three-phase motor with inverter, the rated torque is available even at low speed.

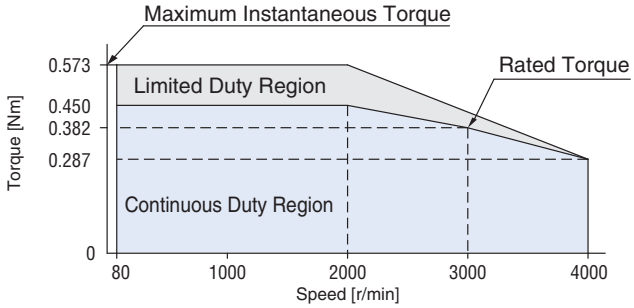

Compact, Lightweight, and High Power

Since these are brushless DC motors with built-in permanent magnets, they offer high output power even though they are compact. Installation is easy, and both equipment weight and space can be reduced.

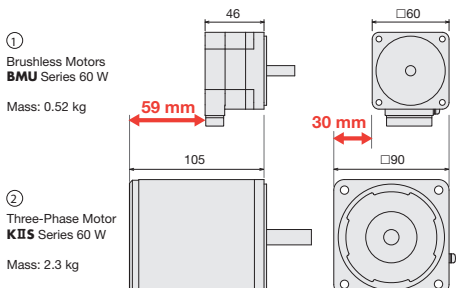

System Configuration

Digital Setting Type

◉ Required for operation
○ Optional accessories

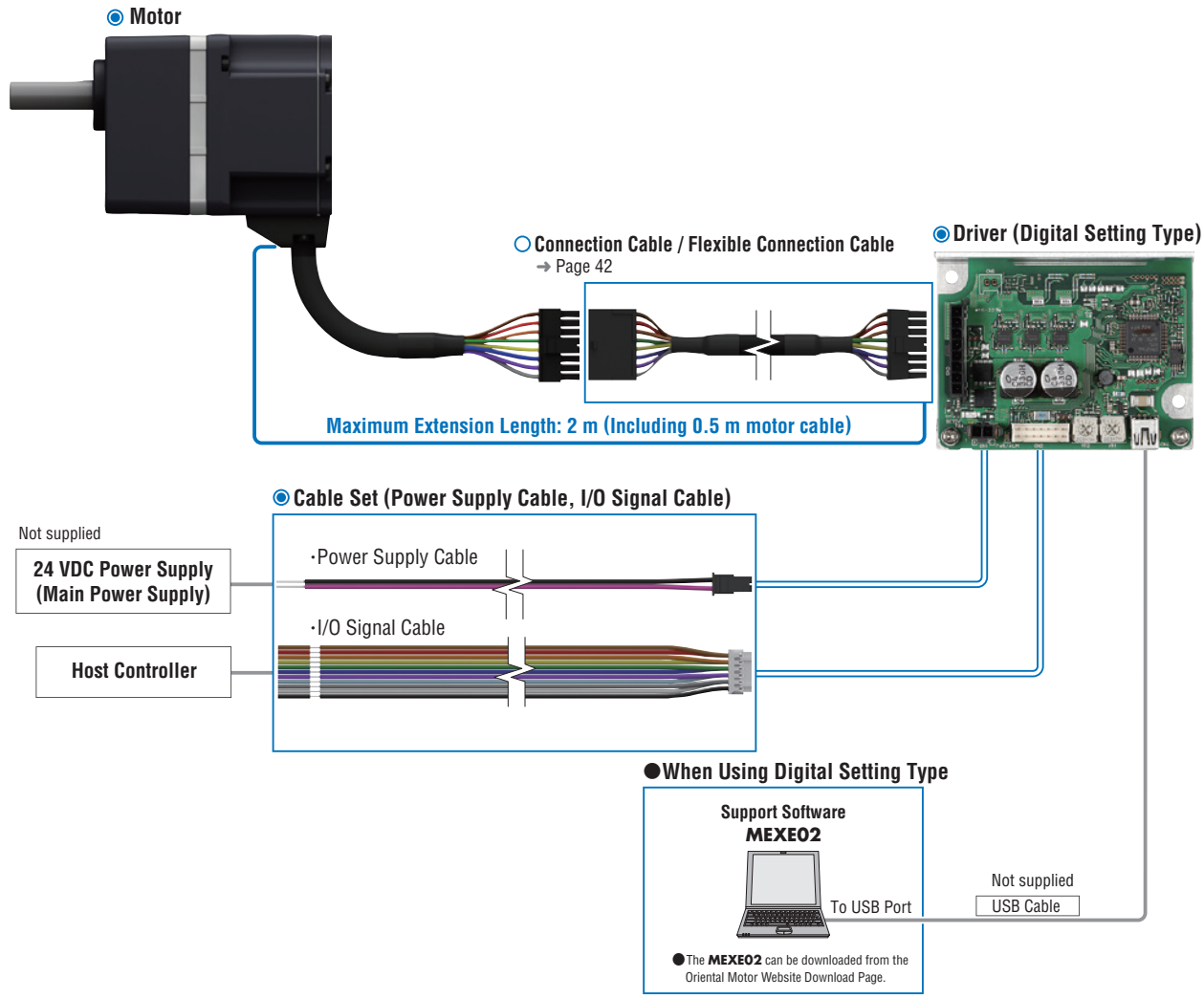

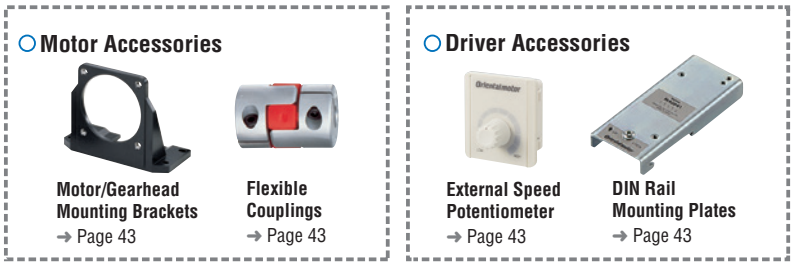

● Example of System Configuration Pricing

Motor		Gearhead		Driver		Cables			Accessories		
	+		+		+	Connection Cable	Cable Set	+	Motor / Gearhead Mounting Bracket	Flexible Coupling	DIN Rail Mounting Plate
BLHM230KC-GFS		GFS2G5		BLH2D30-KD		CC02BLH	LHS003CD		SOL2M4	MCL301010	MADP01
◉		◉		◉		○	◉		○	○	○

● The system configuration shown above is an example. Other combinations are available.

●RS-485 Communication Type

◉ Required for operation
○ Optional accessories

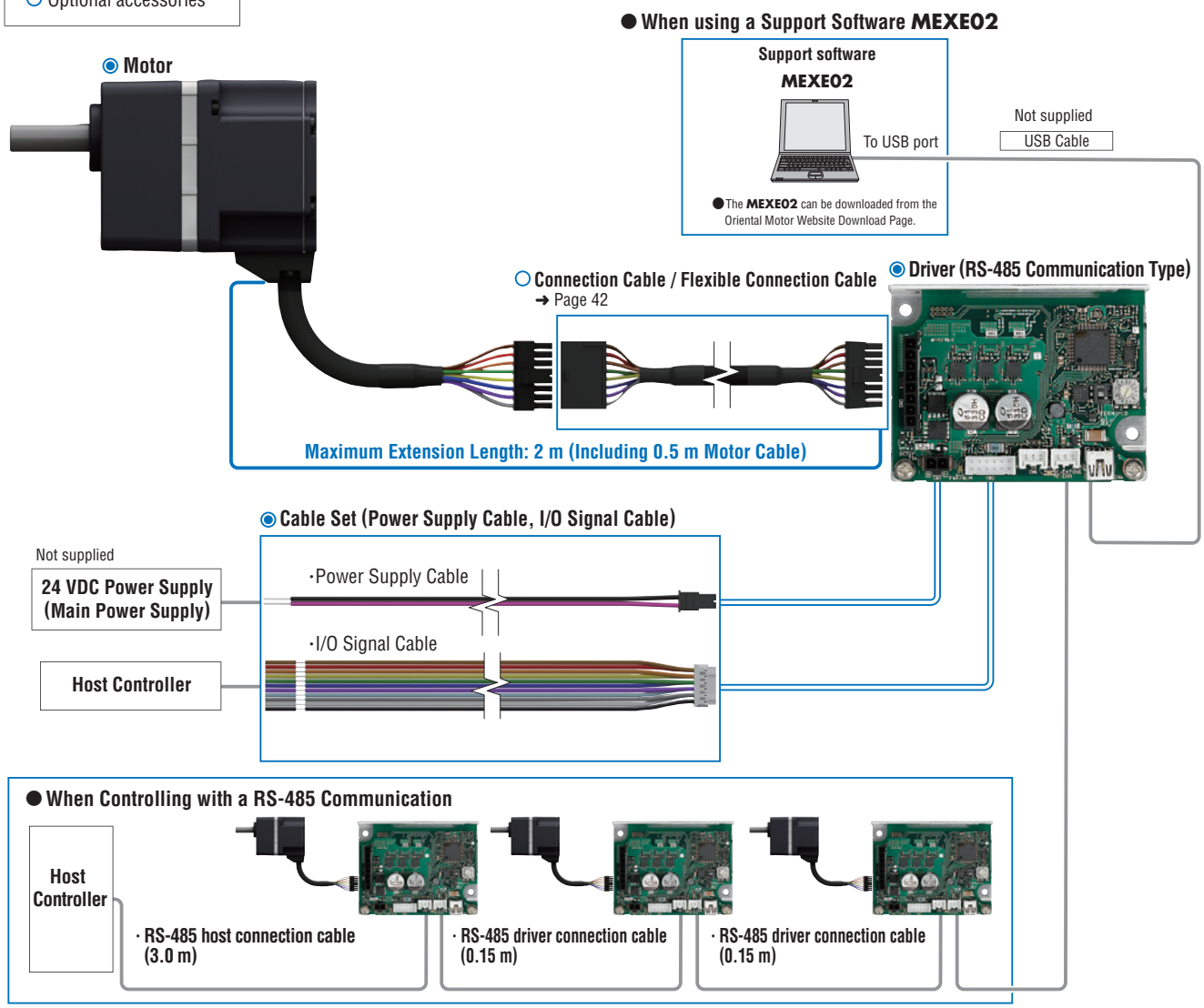

○ Motor Accessories

Motor/Gearhead Mounting Brackets
➜ Page 43

Flexible Couplings
➜ Page 43

○ Driver Accessories

External Speed Potentiometer
➜ Page 43

Din Rail Mounting Plates
➜ Page 43

RS-485 host connection cable (3 m)
➜ Page 43

RS-485 driver connection cable (0.15 m)
➜ Page 43

● Example of System Configuration Pricing

Motor		Gearhead		Driver		Cables			Accessories		
	+		+		+	Connection Cable	Cable Set	+	Motor / Gearhead Mounting Bracket	Flexible Coupling	DIN Rail Mounting Plate
BLHM230KC-GFS		GFS2G5		BLH2D30-KR		CC02BLH	LHS003CC		SOL2M4	MCL301010	MADP01
◉		◉		◉		○	◉		○	○	○

● The system configuration shown above is an example. Other combinations are available.

Product Number

Motor

BLHM 4 50 K C M - GFS

① ② ③ ④ ⑤ ⑥ ⑦

①	Motor Type	**BLHM**: Brushless Motor
②	Frame Size	**0**: 42 mm **2**: 60 mm **4**: 80 mm **5**: 90 mm
③	Output Power	**15**: 15 W **30**: 30 W **50**: 50 W **100**: 100 W
④	Power Supply	**K**: 24 VDC
⑤		**C**: Cable Type
⑥		**M**: Electromagnetic Brake Motor
⑦	Gear Ratio/ Shaft Configuration	**GFS**: **GFS** Pinion Number: Gear ratio for combination types **A**: Round Shaft Type

Gearhead

GFS 2 G 5 FR

① ② ③ ④

①	Motor Shaft type	**GFS**: **GFS** Pinion
②	Frame Size	**2**: 60 mm **4**: 80 mm **5**: 90 mm
③	Gear Ratio	Number: Gear Ratio
④	Output Shaft Material	Blank: Parallel Shaft Gearhead **FR**: Hollow Shaft Flat Gearhead

Driver

BLH2D 50 - K D

① ② ③ ④

①	Driver Type	**BLH2D**: **BLH** Series Driver (15 W, 30 W, 50 W) **BLHD**: **BLH** Series Driver (100 W)
②	Output Power	**15**: 15 W **30**: 30 W **50**: 50 W **100**: 100 W
③	Power Supply	**-K**: 24 VDC (15 W, 30 W, 50 W) **K**: 24 VDC (100 W)
④	Type	Blank: Analogue Setting **D**: Digital Setting **R**: RS-485 Communication

Connection Cable, Flexible Connection Cable

CC 02 BLH R

① ② ③ ④

①	Cable Type	**CC**: Connection Cable
②	Length	**02**: 1.5 m
③	Applicable Motors	**BLH**: Brushless Motor (15 W, 30 W, 50 W) **AXH2**, **BLH2**: Brushless Motor (100 W)
④		Blank: Connection Cable **R**: Flexible Connection Cable

Power Supply Cable and I/O Signal Cable Set (For 15 W, 30 W, 50 W)

LH S 003 C D

① ② ③ ④ ⑤

①	Cable Type	**LH**: Cable Set
②		**S**: Set
③	Length	**003**: 0.3 m **010**: 1 m
④		**C**: Cable
⑤	Applicable Drivers	**C**: Analogue Setting Type, RS-485 Communication Type **D**: Digital Setting Type

Product Line

Motors, drivers and connection cables are sold separately.

Motor

◇Parallel Shaft Gearhead **GFS** Gear

Output Power [W]	Product Name	Gear Ratio
15	**BLHM015K-□***	**5**, **10**, **15**, **20**
		30, **50**, **100**

*The geared type has an integrated motor and gearhead.
The combination of motor and gearhead cannot be changed.

●A number indicating the gear ratio is specified where the box □ is located with in the product name.

◇Round Shaft Type

Output Power [W]	Product Name
15	**BLHM015K-A**
30	**BLHM230KC-A**
50	**BLHM450KC-A**
100	**BLHM5100KC-A**

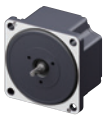

◇Pinion Shaft Type

Output Power [W]	Product Name
30	**BLHM230KC-GFS**
50	**BLHM450KC-GFS**
100	**BLHM5100KC-GFS**

●A number indicating the gear ratio is specified where the box □ is located with in the product name.

Electromagnetic Brake Motor

◇Pinion Shaft Type

Output Power [W]	Product Name
30	**BLHM230KCM-GFS**
50	**BLHM450KCM-GFS**
100	**BLHM5100KCM-GFS**

Gearhead

◇Parallel Shaft Gearhead

Output Power [W]	Product Name	Gear Ratio
30	**GFS2G□**	**5, 10, 15, 20**
		30, 50, 100
		200
50	**GFS4G□**	**5, 10, 15, 20**
		30, 50, 100
		200
100	**GFS5G□**	**5, 10, 15, 20**
		30, 50, 100
		200

● A number indicating the gear ratio is specified where the box □ is located with in the product name.

◇Hollow Shaft Flat Gearhead

Output Power [W]	Product Name	Gear Ratio
30 W	**GFS2G□FR**	**5, 10, 15, 20**
		30, 50, 100
		200
50 W	**GFS4G□FR**	**5, 10, 15, 20**
		30, 50, 100
		200
100 W	**GFS5G□FR**	**5, 10, 15, 20**
		30, 50, 100
		200

● A number indicating the gear ratio is specified where the box □ is located with in the product name.

Driver

◇Analogue Setting Type

Output Power [W]	Product Name
15	**BLH2D15-K**
30	**BLH2D30-K**
50	**BLH2D50-K**
100	**BLHD100K**

◇Digital Setting Type

Output Power [W]	Product Name
15	**BLH2D15-KD**
30	**BLH2D30-KD**
50	**BLH2D50-KD**

◇RS-485 Communication Type

Output Power [W]	Product Name
15	**BLH2D15-KR**
30	**BLH2D30-KR**
50	**BLH2D50-KR**

Connection Cable, Flexible Connection Cable

These cables are used when extending the wiring distance between the motor and the driver to 2 m.

◇ For 15 W, 30 W, 50 W

Type	Length [m]	Product Name
Connection Cable	1.5	**CC02BLH**
Flexible Connection Cable		**CC02BLHR**

◇ For 100 W

Type	Length [m]	Product Name
Connection Cable	1.5	**CC02AXH2**
Flexible Connection Cable		**CC02BLH2R**

Power Supply Cable and I/O Signal Cable Set (For 15 W, 30 W, 50 W)

Cables come as a set of power supply cable and I/O signal cable.

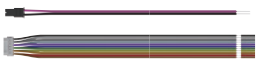

Setting Type	Length [m]	Product Name
Analogue Setting Type RS-485 Communication Type	0.3	**LHS003CC**
	1	**LHS010CC**
Digital Setting Type	0.3	**LHS003CD**
	1	**LHS010CD**

Included

Motor

Geared Type	Parallel Key	Safety Cover	Installation Screws	Operating Manual
Geared Motor	–	–	–	1 Copy
Parallel Shaft Gearhead **GFS** Gear	1 pc.	–	1 Set	
Hollow Shaft Flat Gear-head **FR** Gear	1 pc.	1 Set	1 Set	
Round Shaft Type	–	–	–	

Electromagnetic Brake Motor

Type	Varistor	Parallel Key	Safety Cover	Installation Screws	Operating Manual
Parallel Shaft Gearhead **GFS** Gear	1 pc.	1 pc.	–	1 Set	1 Copy
Hollow Shaft Flat Gearhead **FR** Gear	1 pc.	1 pc.	1 Set	1 Set	

Driver

Output Power [W]	Power Supply Cable	I/O Signal Cable	Operating Manual
15 30 50	–	–	1 Copy
100	1 pc.	1 pc.	1 Copy

About the Gearheads

● Parallel Shaft Gearhead **GFS** Gear

● Hollow Shaft Flat Gearhead **FR** Gear

Motor and gearhead are delivered pre-assembled.

The combination of motors and gearheads can be changed.

Screw Fitting

The motor assembly position can be changed in 90° increments.

● Geared Motor (15 W)

The geared motor has an integrated motor and gearhead.

Motor and gearhead combinations cannot be changed.

Integrated Motor and Gearhead

Combination List

15 W, 30 W, 50 W

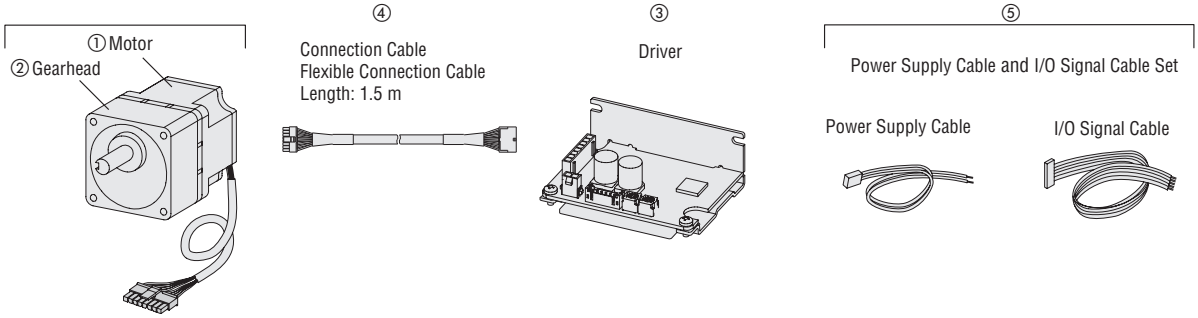

- The motor cable can also be connected directly to the driver without using a connection cable (Or a flexible connection cable).
- The maximum extension length between the motor and driver is 2 m (Including 0.5 m motor cable).

◇Analogue Setting Type

Output Power [W]	Type	Motor	Gearhead	Driver	Connection Cable Flexible Connection Cable	Power Supply Cable and I/O Signal
		Product Name	Product Name	Product Name	Product Name	Product Name
		①	②	③	④	⑤
15	Geared Type*	**BLHM015K-□**	—	**BLH2D15-K**	**CC02BLH CC02BLHR**	**LHS003CC, LHS010CC**
	Round Shaft Type	**BLHM015K-A**	—			
30	Parallel Shaft Gearhead **GFS** Gear	**BLHM230KC■-GFS**	**GFS2G□**	**BLH2D30-K**	**CC02BLH CC02BLHR**	**LHS003CC, LHS010CC**
	Hollow Shaft Flat Gearhead **FR** Gear	**BLHM230KC■-GFS**	**GFS2G□FR**			
	Round Shaft Type	**BLHM230KC-A**	—			
50	Parallel Shaft Gearhead **GFS** Gear	**BLHM450KC■-GFS**	**GFS4G□**	**BLH2D50-K**	**CC02BLH CC02BLHR**	**LHS003CC, LHS010CC**
	Hollow Shaft Flat Gearhead **FR** Gear	**BLHM450KC■-GFS**	**GFS4G□FR**			
	Round Shaft Type	**BLHM450KC-A**	—			

*The geared type has an integrated motor and gearhead. The combination of motor and gearhead cannot be changed.

- For the elecromagnetic brake type **M** is entered where the box ■ is located in the product code.
  A number indicating the gear ratio is specified where the box □ is located in the product name.

◇Digital Setting Type

Output Power [W]	Type	Motor	Gearhead	Driver	Connection Cable Flexible Connection Cable	Power Supply Cable and I/O Signal
		Product Name	Product Name	Product Name	Product Name	Product Name
		①	②	③	④	⑤
15	Geared Type*	**BLHM015K-□**	—	**BLH2D15-KD**	**CC02BLH CC02BLHR**	**LHS003CD, LHS010CD**
	Round Shaft Type	**BLHM015K-A**	—			
30	Parallel Shaft Gearhead **GFS** Gear	**BLHM230KC■-GFS**	**GFS2G□**	**BLH2D30-KD**	**CC02BLH CC02BLHR**	**LHS003CD, LHS010CD**
	Hollow Shaft Flat Gearhead **FR** Gear	**BLHM230KC■-GFS**	**GFS2G□FR**			
	Round Shaft Type	**BLHM230KC-A**	—			
50	Parallel Shaft Gearhead **GFS** Gear	**BLHM450KC■-GFS**	**GFS4G□**	**BLH2D50-KD**	**CC02BLH CC02BLHR**	**LHS003CD, LHS010CD**
	Hollow Shaft Flat Gearhead **FR** Gear	**BLHM450KC■-GFS**	**GFS4G□FR**			
	Round Shaft Type	**BLHM450KC-A**	—			

*The geared type has an integrated motor and gearhead. The combination of motor and gearhead cannot be changed.

- For the elecromagnetic brake type **M** is entered where the box ■ is located in the product code.
  A number indicating the gear ratio is specified where the box □ is located in the product name.

◇RS-485 Communication Type

Output Power [W]	Type	Motor	Gearhead	Driver	Connection Cable Flexible Connection Cable	Power Supply Cable and I/O signal Cable Set
		Product Name	Product Name	Product Name	Product Name	Product Name
		①	②	③	④	⑤
15	Geared Type*	**BLHM015K-□**	—	**BLH2D15-KR**	**CC02BLH CC02BLHR**	**LHS003CC, LHS010CC**
	Round Shaft Type	**BLHM015K-A**	—			
30	Parallel Shaft Gearhead **GFS** Gear	**BLHM230KC■-GFS**	**GFS2G□**	**BLH2D30-KR**	**CC02BLH CC02BLHR**	**LHS003CC, LHS010CC**
	Hollow Shaft Flat Gearhead **FR** Gear	**BLHM230KC■-GFS**	**GFS2G□FR**			
	Round Shaft Type	**BLHM230KC-A**	—			
50	Parallel Shaft Gearhead **GFS** Gear	**BLHM450KC■-GFS**	**GFS4G□**	**BLH2D50-KR**	**CC02BLH CC02BLHR**	**LHS003CC, LHS010CC**
	Hollow Shaft Flat Gearhead **FR** Gear	**BLHM450KC■-GFS**	**GFS4G□FR**			
	Round Shaft Type	**BLHM450KC-A**	—			

*The geared type has an integrated motor and gearhead. The combination of motor and gearhead cannot be changed.

- For the elecromagnetic brake type **M** is entered where the box ■ is located in the product code.
  A number indicating the gear ratio is specified where the box □ is located in the product name.

●100 W

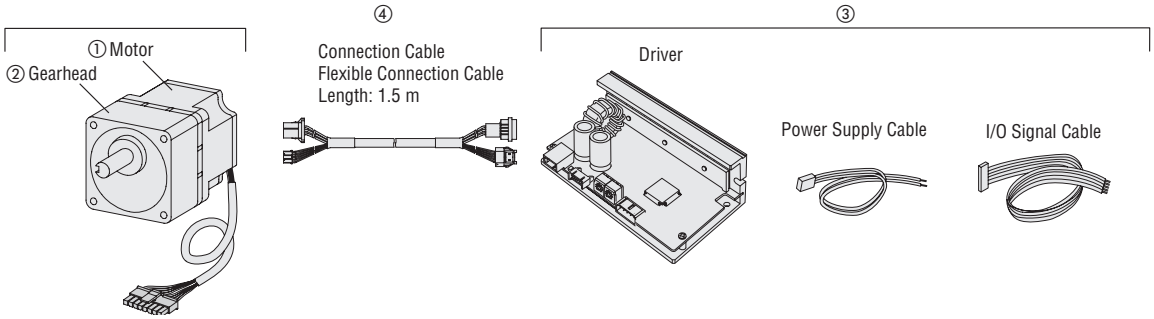

- The motor cable can also be connected directly to the driver without using a connection cable (Or a flexible connection cable).
- The maximum extension length between the motor and driver is 2 m (Including 0.5 m motor cable).

◇Analogue Setting Type

Output Power [W]	Type	Motor	Gearhead	Driver	Connection Cable Flexible Connection Cable
		Product Name	Product Name	Product Name	Product Name
		①	②	③	④
100	Parallel Shaft Gearhead **GFS** Gear	**BLHM5100KC-GFS**	**GFS5G□**	**BLHD100K**	**CC02AXH2 CC02BLH2R**
	Hollow Shaft Flat Gearhead **FR** Gear	**BLHM5100KC-GFS**	**GFS5G□FR**		
	Round Shaft Type	**BLHM5100KC-A**	—		

- For the elecromagnetic brake type **M** is entered where the box ■ is located in the product code.
  A number indicating the gear ratio is specified where the box □ is located in the product name.

Parallel Shaft Gearhead **GFS** Gear

15 W, 30 W, 50 W, 100 W

Specifications

Product Name	Motor		BLHM015K-□	BLHM230KC-GFS	BLHM450KC-GFS	BLHM5100KC-GFS
		With Electromagnetic Brake	—	BLHM230KCM-GFS	BLHM450KCM-GFS	BLHM5100KCM-GFS
	Gearhead		—	GFS2G□	GFS4G□	GFS5G□
	Driver	Analogue Setting Type	BLH2D15-K	BLH2D30-K	BLH2D50-K	BLHD100K
		Digital Setting Type	BLH2D15-KD	BLH2D30-KD	BLH2D50-KD	—
		RS-485 Communication Type	BLH2D15-KR	BLH2D30-KR	BLH2D50-KR	—
Rated Output Power (Continuous)		W	15	30	50	100
Power Supply Input	Rated Voltage	VDC	24			
	Permissible Voltage Range		−10 - +10%			
	Rated Input Current	A	0.93	1.9	2.9	6.0
	Maximum Input Current	A	2.3	4.1	5.4	9.8
Rated Speed		r/min	3000	2500		
Speed Control Range			100 - 3000 r/min (Speed Ratio 1:30) [80 - 3000 r/min (Speed Ratio 1:37.5)*2]			
Speed Regulation *2	Load		Max. ±0.5% (±0.2%): Conditions 0 - rated torque, rated speed, rated voltage, normal ambient temperature			
	Voltage		Max. ±0.5% (±0.2%): Conditions Rated voltage ±10%, rated speed, no load, normal ambient temperature			
	Temperature		Max. ±0.5% (±0.2%): Conditions Operating ambient temperature 0 - +50°C, rated speed, no load, rated voltage			
Electromagnetic Brake	Type		—	Power Off Activated Type		
	Static Friction Torque	Nm		0.12	0.2	0.4

*1 Only for motors without electromagnetic brake, analogue and digital setting type drivers.
*2 The values shown in brackets are specifications of the digital setting type (when **MEXE02** is used) and RS-485 communication.
● Values shown correspond to the specifications and characteristics of the motor without a gearhead attached.
● A number indicating the gear ratio is specified where the box □ is located in the product name.

Gear Ratio				5	10	15	20	30	50	100	200
Rotation Direction		15 W		Same direction as the motor			Opposite direction to the motor		Same direction as the motor		—
		30 W 50 W 100 W		Same direction as the motor				Opposite direction to the motor			Same direction as the motor
Output Shaft Speed [r/min]*			80 r/min	16	8	5.3	4	2.7	1.6	0.8	0.4
			2500 r/min	500	250	167	125	83	50	25	12.5
			3000 r/min	600	300	200	150	100	60	30	15
Permissible Torque [Nm]		15 W	80 to 3000 r/min	0.22	0.43	0.65	0.83	1.2	1.9	2	—
		30 W	80 to 2500 r/min	0.52	1.0	1.6	2.1	3.0	4.9	6	6
			3000 r/min	0.43	0.86	1.3	1.7	2.5	4.1	6	6
		50 W	80 to 2500 r/min	0.86	1.7	2.6	3.4	4.9	8.2	16	16
			3000 r/min	0.72	1.4	2.1	2.9	4.1	6.8	13.7	16
		100 W	100 to 2500 r/min	1.8	3.6	5.4	7.2	10.3	17.2	30	30
			3000 r/min	0.90	1.8	2.7	3.6	5.2	8.6	17.2	30
Permissible Radial Load [N]	10 mm from Output Shaft End	15 W		50							—
		30 W		100	150			200			
		50 W		200	300			450			
		100 W		300	400			500			
	20 mm from Output Shaft End	30 W		150	200			300			
		50 W		250	350			550			
		100 W		400	500			650			
Permissible Axial Load [N]		15 W		30							
		30 W		40							
		50 W		100							
		100 W		150							
Permissible Inertia J: [$\times 10^{-4}$kgm^2]		15 W		3	14	30	50	120	300	600	—
		30 W		12	50	110	200	370	920	2500	5000
		50 W		22	95	220	350	800	2200	6200	12000
		100 W		45	190	420	700	1600	4500	12000	25000
	When Instantaneous Stop or Bi-Directional Operation is performed	15 W		0.4	1.7	3.9	7.0	15.7	43.7		—
		30 W		1.55	6.2	14.0	24.8	55.8	155		
		50 W		5.5	22	49.5	88	198	550		
		100 W		25	100	225	400	900	2500		

*The output shaft speed is calculated by dividing the speed by the gear ratio.

◇Radial Load and Axial Load

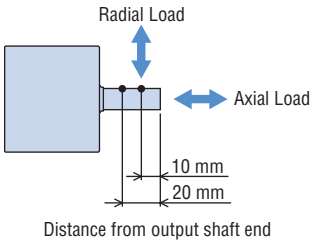

Speed - Torque Characteristics

Continuous Duty Region: Continuous operation is possible in this region.
Limited Duty Region: This region is primarily used when accelerating.

15 W

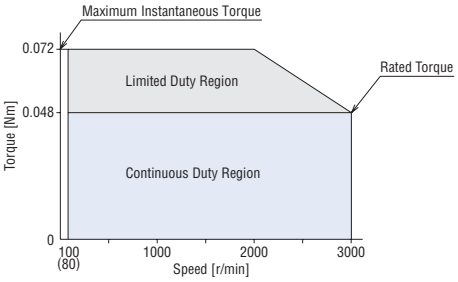

30 W

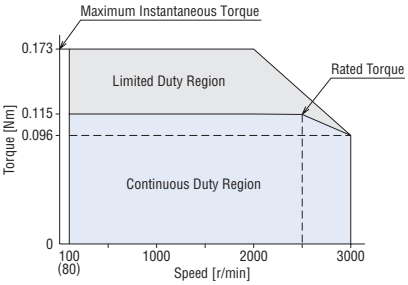

50 W

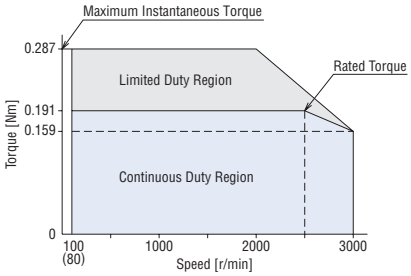

100 W

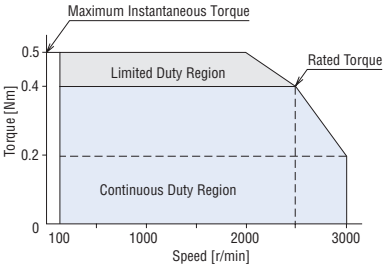

● Values shown correspond to the specifications and characteristics of the motor without a gearhead attached, without the use of an extension cable.

Hollow Shaft Flat Gearhead **FR** Gear

30 W, 50 W, 100 W

Specifications

Product Name	Motor		**BLHM230KC-GFS**	**BLHM450KC-GFS**	**BLHM5100KC-GFS**
		With Electromagnetic Brake	**BLHM230KCM-GFS**	**BLHM450KCM-GFS**	**BLHM5100KCM-GFS**
	Gearhead		**GFS2G□FR**	**GFS4G□FR**	**GFS5G□FR**
	Driver	Analogue Setting Type	**BLH2D30-K**	**BLH2D50-K**	**BLHD100K**
		Digital Setting Type	**BLH2D30-KD**	**BLH2D50-KD**	—
		RS-485 Communication Type	**BLH2D30-KR**	**BLH2D50-KR**	—
Rated Output Power (Continuous)		W	30	50	100
Power Supply Input	Rated Voltage	VDC	24		
	Permissible Voltage Range		−10 - +10%		
	Rated Input Current	A	1.9	2.9	6.0
	Maximum Input Current	A	4.1	5.4	9.8
Rated Speed		r/min	2500		
Speed Control Range			100 - 3000 r/min (Speed Ratio 1:30) [80 - 3000 r/min (Speed Ratio 1:37.5)*2]		
Speed Regulation *2	Load		Max. ±0.5% (±0.2%): Conditions 0 - rated torque, rated speed, rated voltage, normal ambient temperature		
	Voltage		Max. ±0.5% (±0.2%): Conditions Rated voltage ±10%, rated speed, no load, normal ambient temperature		
	Temperature		Max. ±0.5% (±0.2%): Conditions Operating ambient temperature 0 - +50°C, rated speed, no load, rated voltage		
Electromagnetic Brake	Type		Power Off Activated Type		
	Static Friction Torque	Nm	0.12	0.2	0.4

*1 Only for motors without electromagnetic brake, analogue and digital setting type drivers.
*2 The values shown in brackets are specifications of the digital setting type (when **MEXE02** is used) and RS-485 communication.
● Values shown correspond to the specifications and characteristics of the motor without a gearhead attached.
● A number indicating the gear ratio is entered where the box □ is located in the product name.

Gear Ratio				5	10	15	20	30	50	100	200
Output Shaft Speed [r/min]*1		80 r/min		16	8	5.3	4	2.7	1.6	0.8	0.4
		2500 r/min		500	250	167	125	83	50	25	12.5
		3000 r/min		600	300	200	150	100	60	30	15
Permissible Torque [Nm]		30 W	80 to 2500 r/min	0.46	0.98	1.5	2.0	2.9	4.9	9.8	17
			3000 r/min	0.38	0.82	1.2	1.6	2.4	4.1	8.2	16.3
		50 W	80 to 2500 r/min	0.81	1.6	2.4	3.2	4.9	8.1	16.2	32.5
			3000 r/min	0.68	1.4	2.0	2.7	4.1	6.8	13.5	27
		100 W	100 to 2500 r/min	1.7	3.4	5.1	6.8	10.2	17	34	68
			3000 r/min	0.85	1.7	2.6	3.4	5.1	8.5	17	34
Permissible Radial Load [N]*2	10 mm from Installation Surface	30 W		450		500					
		50 W		800		1200					
		100 W		900		1300		1500			
	20 mm from Installation Surface	30 W		370		400					
		50 W		660		1000					
		100 W		770		1110		1280			
Permissible Axial Load [N]		30 W		200							
		50 W		400							
		100 W		500							
Permissible Inertia J: [$\times 10^{-4}$kgm^2]		30 W		12	50	110	200	370	920	2500	5000
		50 W		22	95	220	350	800	2200	6200	12000
		100 W		45	190	420	700	1600	4500	12000	25000
	When Instantaneous Stop or Bi-Directional Operation is performed	30 W		1.55	6.2	14.0	24.8	55.8	155		
		50 W		5.5	22	49.5	88	198	550		
		100 W		25	100	225	400	900	2500		

*1 The output shaft speed is calculated by dividing the speed by the gear ratio.
*2 The radial load at each distance can be calculated with a formula. ➜ Page 41

◇Rotation Direction

●Front View

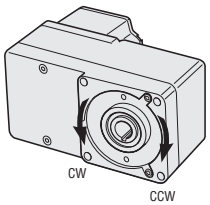

●Rear View

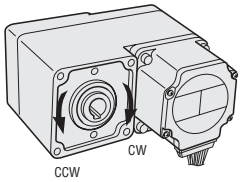

◇Radial Load and Axial Load

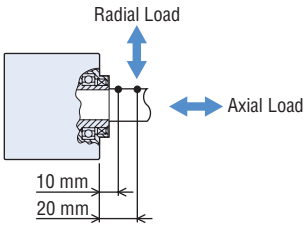

Distance from Installation Surface

Speed - Torque Characteristics

Continuous Duty Region: Continuous operation is possible in this region.
Limited Duty Region: This region is primarily used when accelerating.

30 W

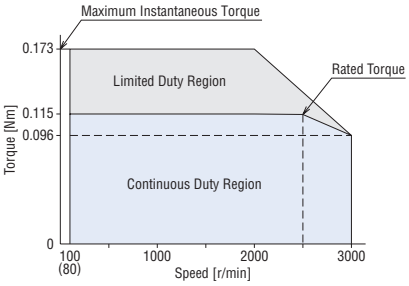

50 W

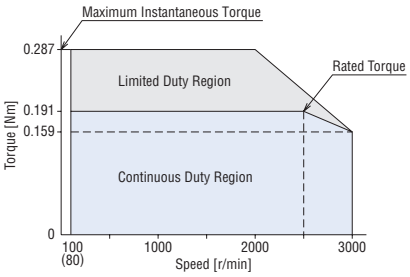

100 W

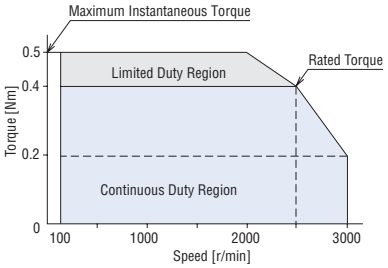

● Values shown correspond to the specifications and characteristics of the motor without a gearhead attached, without the use of an extension cable.

Round Shaft 15 W, 30 W, 50 W, 100 W

Specifications

Product Name	Motor			BLHM015K-A	BLHM230KC-A	BLHM450KC-A	BLHM5100KC-A
	Driver	Analogue Setting Type		BLH2D15-K	BLH2D30-K	BLH2D50-K	BLHD100K
		Digital Setting Type		BLH2D15-KD	BLH2D30-KD	BLH2D50-KD	—
		RS-485 Communication Type		BLH2D15-KR	BLH2D30-KR	BLH2D50-KR	—
Rated Output Power (Continuous)			W	15	30	50	100
Power Supply Input	Rated Voltage		VDC	24			
	Permissible Voltage Range			−10 - +10%			
	Rated Input Current		A	0.93	1.9	2.9	6.0
	Maximum Input Current		A	2.3	4.1	5.4	9.8
Rated Speed			r/min	3000	2500		
Speed Control Range				100 - 3000 r/min (Speed Ratio 1:30) [80 - 3000 r/min (Speed Ratio 1:37.5)*2]			
Rated Torque			Nm	0.048	0.115	0.191	0.4
Maximum Instaneous Torque			Nm	0.072	0.173	0.287	0.5
Permissible Radial Load	10 mm from Output Shaft End		N	50	70	120	160
	20 mm from Output Shaft End		N	—	100	140	170
Permissible Axial Load				Half of the motor mass or less			
Rotor Inertia	J: $\times 10^{-4}$kgm^2			0.032	0.087	0.23	0.61
Permissible Inertia	J: $\times 10^{-4}$kgm^2			0.5	1.8	3.3	5.6
Speed Regulation *2	Load			Max. ±0.5% (±0.2%): Conditions 0 - rated torque, rated speed, rated voltage, normal ambient temperature			
	Voltage			Max. ±0.5% (±0.2%): Conditions Rated voltage ±10%, rated speed, no load, normal ambient temperature			
	Temperature			Max. ±0.5% (±0.2%): Conditions Operating ambient temperature 0 - +50˚C, rated speed, no load, rated voltage			

*1 Only for analogue and digital setting type drivers.
*2 The values shown in brackets are specifications of the digital setting type (when **MEXE02** is used) and RS-485 communication.

◇Radial Load and Axial Load

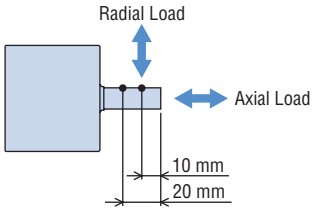

Distance from output shaft end

Speed - Torque Characteristics

Continuous Duty Region: Continuous operation is possible in this region.
Limited Duty Region: This region is primarily used when accelerating.

●15 W

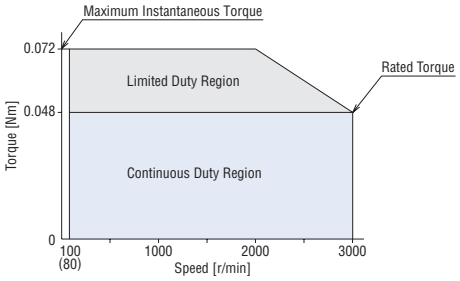

●30 W

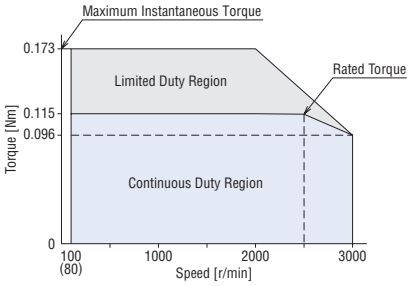

●50 W

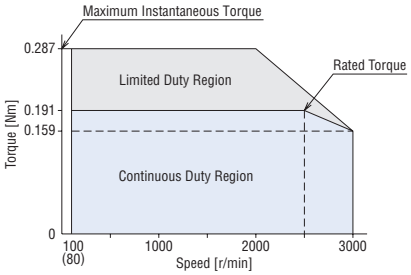

●100 W

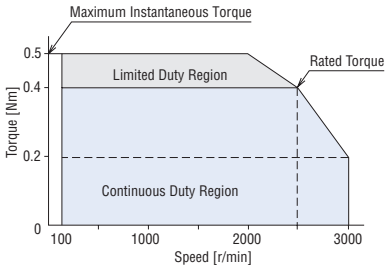

● Values shown correspond to the specifications and characteristics of the motor without a gearhead attached, without the use of an extension cable.

Common Specifications

Driver Type			Analogue Setting Type	Digital Setting Type	RS-485 Communication Type
Operation setting			2 Speeds	8 Speeds	8 Speeds
Speed		Setting Range	100 - 3000 r/min	80 - 3000 r/min	80 - 3000 r/min
		Setting Method	●External analogue setting device ●VR1	●Digital setting (**MEXE02** support software) ●External analogue setting device ●PWM input ●VR1 ●VR2	●Digital setting (**MEXE02** support software) ●External analogue setting device ●PWM input
Acceleration/ Deceleration Time		Setting Range	15 W, 30 W, 50 W: 0.1 - 12.0 s 100 W: 0.5 - 10 s Acceleration/deceleration time is a common setting	0.1 - 15.0 s	0.1 - 15.0 s
		Setting Method	●VR2	●Digital (**MEXE02** support software) ●VR1 ●VR2	●Digital (**MEXE02** support software)
Torque Limiting*1		Setting Range	–	0 - 200%	0 - 200%
		Setting Method		●Digital (**MEXE02** support software) ●External analogue setting device ●PWM input ●VR1 ●VR2	●Digital (**MEXE02** support software) ●External analogue setting device ●PWM input
I/O Functions	Direct Input	Method	C-MOS Negative Logic Input	C-MOS Negative Logic Input	C-MOS Negative Logic Input
		Inputs	5	6	5
		Initial Assignment	15 W, 30 W, 50 W: START/STOP, RUN/BRAKE, FWD/REV, M0, ALM-RST 100 W: START/STOP, RUN/BRAKE, CW/CCW, INT.VR/EX, ALARM-RESET	START/STOP, RUN/BRAKE, FWD/REV, M0, M1, ALM-REST	START/STOP, RUN/BRAKE, FWD/REV, M0, ALM-REST
	Direct Output	Method	Transistor and open-collector output	Transistor and open-collector output	Transistor and open-collector output
		Outputs	2	4	2
		Initial Assignment	15 W, 30 W, 50 W: SPEED-OUT, ALM-B 100 W: SPEED, ALARM	SPEED-OUT, ALM-B, TLC, DIR	SPEED-OUT, ALM-B
	RS-485 Communication Remote Inputs		–	–	16
	RS-485 Communication Remote Outputs		–	–	16
Setting Tool	**MEXE02** Support Software		–	○	○
Information			–	○	○
Alarm*2			○	○	○
Maximum Extension Length			Motor and driver distance: 2 m [when a connection cable (sold separately) is used]		
Time Rating			Continuous		

*1 Regarding the torque limit, the variance between the set value and the generated torque is up to ±20% (at rated torque and rated speed) depending on the set speed, power supply voltage and motor cable extension distance.

*2 With the **BLH** Series, motor speed cannot be controlled in a gravitational operation or other applications where the motor shaft is turned by the load. When a load exceeding the permissible inertia is driven or a gravitational operation is performed, the protective function will be activated and the motor will coast to a stop.

General Specifications

Item		Motor	Driver
Insulation Resistance		100 MΩ or more when 500 VDC megger is applied between the windings and the case after continuous operation under normal ambient temperature and humidity.	100 MΩ or more when 500 VDC megger is applied between the power supply input and the heat sink after continuous operation under normal ambient temperature and humidity.
Dielectric Strength		Sufficient to withstand 0.5 kVAC at 50 Hz applied between the windings and the case for 1 minute after continuous operation under normal ambient temperature and humidity.	Sufficient to withstand 0.5 kVAC at 50 Hz applied between the power supply input and the heat sink for 1 minute after continuous operation under normal ambient temperature and humidity (RS-485 Communication Type is excluded).
Temperature Rise		The temperature rise of the windings is 50˚C or less and that of the case surface is 40˚C or less*1, measured by the thermocouple method after continuous operation under normal ambient temperature and humidity.	The temperature rise of the heat sink is 50˚C or less, measured by the thermocouple method after continuous operation under normal ambient temperature and humidity.
Operating Environment	Ambient Temperature	0 to +50˚C (Non-freezing)	
	Ambient Humidity	85% or less (Non-condensing)	
	Altitude	Up to 1000 m above sea level	
	Atmosphere	No corrosive gases or dust. Cannot be used in a radioactive area, magnetic field, vacuum, or other non-standard environments.	
	Vibration	Must not be subjected to continuous vibration or excessive shock. Conforms to JIS C 60068-2-6, "Sine-Wave Vibration Test Method" Frequency Range: 10 to 55 Hz Half Amplitude: 0.15 mm Sweep Direction: 3 Directions (X, Y, and Z) Number of Sweeps: 20 Times	
Storage Conditions*2	Ambient Temperature	-25 to +70°C (Non-freezing) Electromagnetic Brake Type: -20 to +70˚C (Non-freezing)	-25 to +70˚C (Non-freezing)
	Ambient Humidity	85% or less (Non-condensing)	
	Altitude	Up to 3000 m above sea level	
	Atmosphere	No corrosive gases or dust. Not exposed to water and oil. Cannot be used in a radioactive area, magnetic field, vacuum, or other non-standard environments.	
Insulation Class		UL/CSA Standards: 105 (A), EN Standards: 120 (E)	—
Degree of Protection		15 W: IP40	IP00
		30 W, 50 W, 100 W: IP65 (Excluding the installation surface of the round shaft type and connectors)	

*1 Install the round shaft type motor to a heat sink (Material: aluminum) of one of the following sizes to maintain a motor case surface temperature of 90˚C or less.
(15 W type is excluded.)
30 W type: 115×115 mm thickness 5 mm, 50 W type: 135×135 mm thickness 5 mm, 100 W type: 200×200 mm thickness 5 mm

*2 The storage condition applies to short periods such as the period during transportation.

Note

- Do not measure the insulation resistance or perform a dielectric voltage withstand test while the motor and driver are connected.

RS-485 Communication Specification

Electrical Characteristics	EIA-485 Based Use a shielded twisted pair cable and keep the total wiring distance including extension to 10 m or less.
Communication Mode	Half duplex, Asynchronous communication (data: 8 bits, stop bit: 1 bit or 2 bits, parity: none, even, or odd)
Transmission Rate	Select either from 9600 bps, 19200 bps, 38400 bps, 57600 bps, 115200 bps, 230400 bps.
Protocol	Modbus RTU Mode
Connection Units	Up to 15 drivers can be connected to a single programmable controller (master device).

Electromagnetic Brake Specification

Model		BLHM230	BLHM450	BLHM5100
Type		Power Off Activated Type (For holding)		
Power Supply Voltage		24 VDC±10%		
Power Supply Current	A	0.084	0.31	0.31
Brake Activation Time	ms	100		
Brake Release Time	ms	100		
Time Rating		Continuous		

Connecting the Electromagnetic Brake

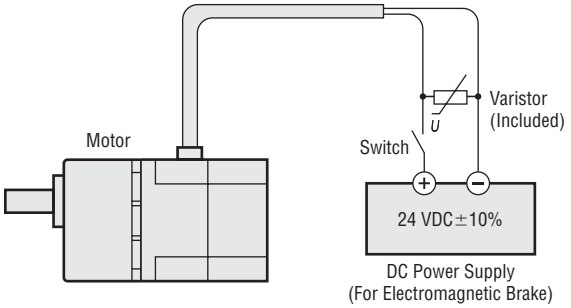

- Electromagnetic brake leads and varistor have no polarity.

Note

- Before holding a load with an electromagnetic brake, make sure that the motor has stopped.
  If the brake is applied during rotation, it may be damaged.

Dimensions (Unit = mm)

- Installation screws are included with the parallel shaft gearhead. Installation screws ➜ Page 31
- A number indicating the gear ratio is specified where the box □ is located in the product name.

Motor

◇Geared Type 15 W

BLHM015K-□

Mass: 0.5 kg

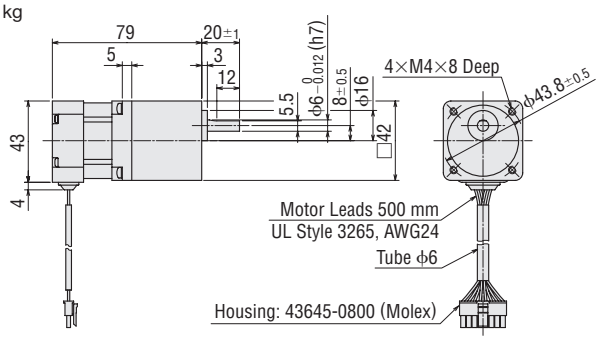

◇Round Shaft Type 15 W

BLHM015K-A

Mass: 0.25 kg

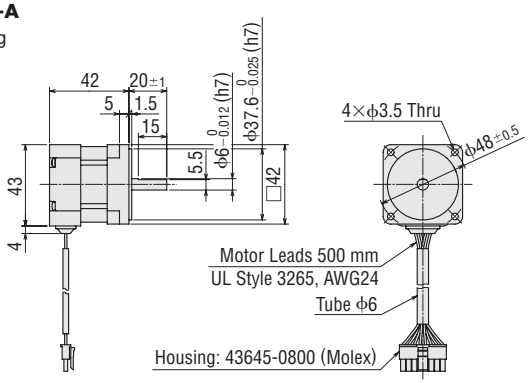

◇Parallel Shaft Gearhead **GFS** Gear 30 W

Motor Product Name	Gearhead Product Name	Gear Ratio	L	Mass [kg]
BLHM230KC-GFS	**GFS2G□**	**5 - 20**	34	1.0
		30 - 100	38	
		200	43	

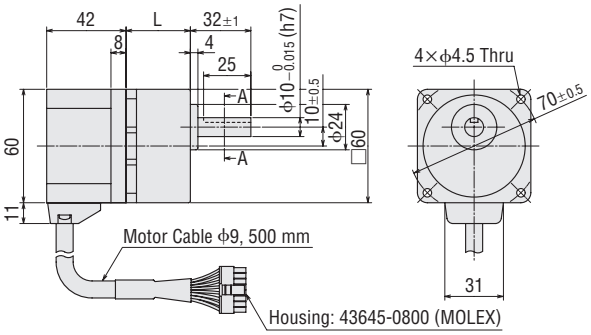

◇Key and Key Slot (Included)

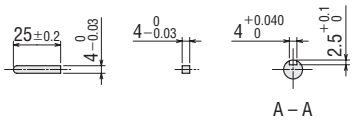

◇Hollow Shaft Flat Gearhead **FR** Gear 30 W

BLHM230KC-□FR

Motor: BLHM230KC-GFS

Gearhead: GFS2G□FR

Mass: 1.3 kg

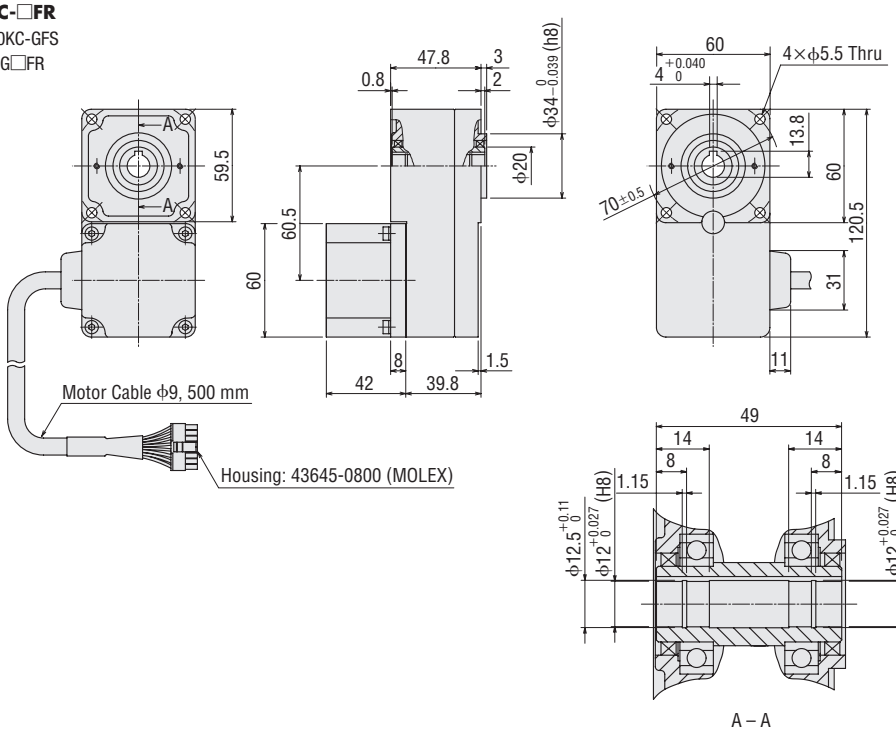

◇Key (Included)

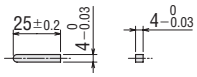

◇Round Shaft Type 30 W

BLHM230KC-A

Mass: 0.5 kg

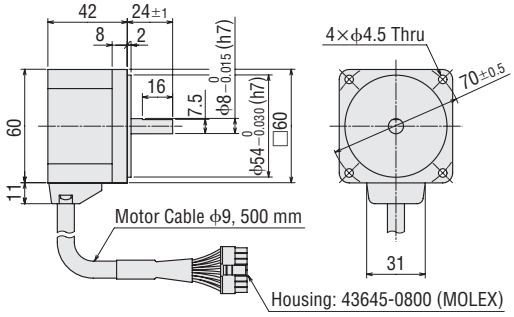

◇Parallel Shaft Gearhead **GFS** Gear 50 W

Motor Product Name	Gearhead Product Name	Gear Ratio	L	Mass [kg]
BLHM450KC-GFS	**GFS4G□**	**5 - 20**	41	1.8
		30 - 100	46	
		200	51	

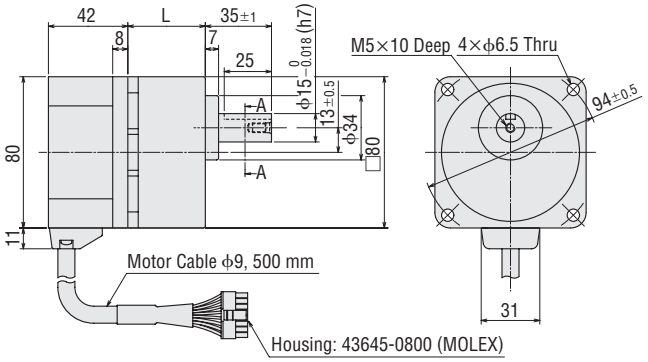

◇Key and Key Slot (Included)

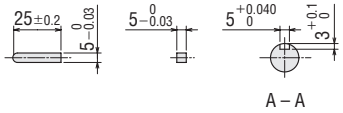

◇Hollow Shaft Flat Gearhead **FR** Gear 50 W

BLHM450KC-□FR

Motor: BLHM450KC-GFS

Gearhead: GFS4G□FR

Mass: 2.4 kg

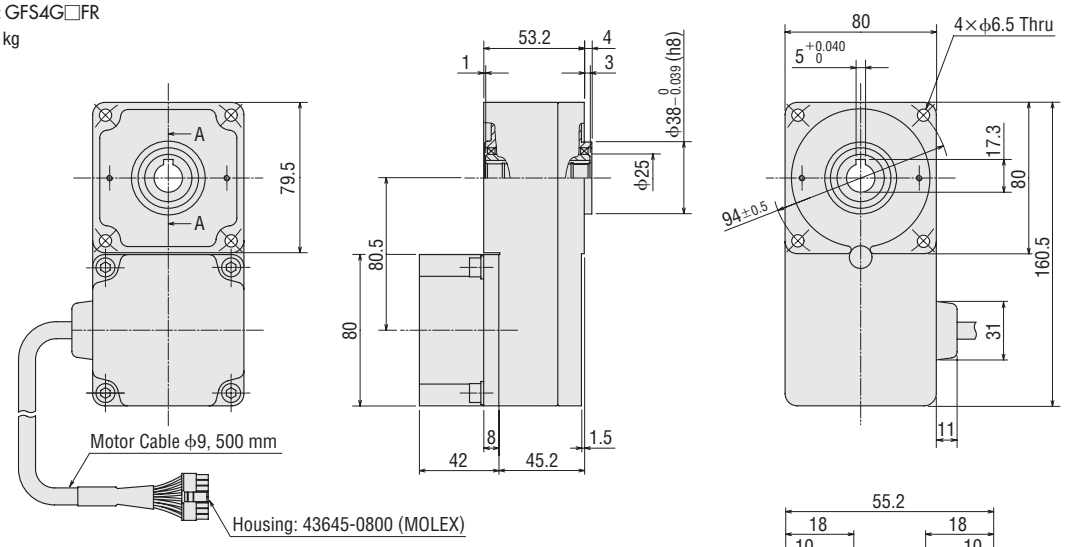

◇Key (Included)

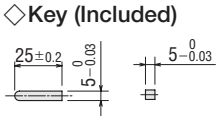

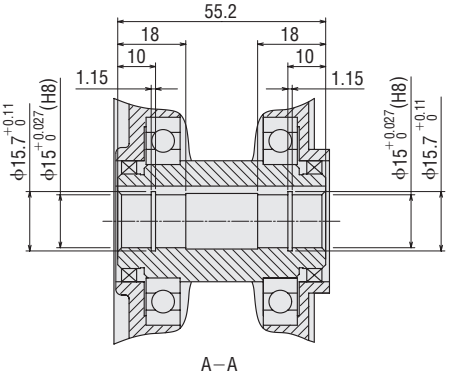

◇Round Shaft Type 50 W

BLHM450KC-A

Mass: 0.8 kg

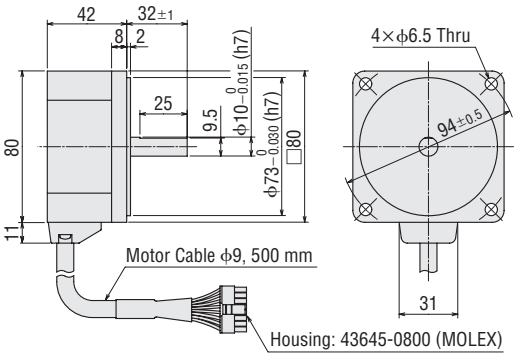

◇Parallel Shaft Gearhead **GFS** Gear 100 W

Motor Product Name	Gearhead Product Name	Gear Ratio	L	Mass [kg]
BLHM5100KC-GFS	**GFS5G□**	**5 - 20**	45	2.9
		30 - 100	58	
		200	64	

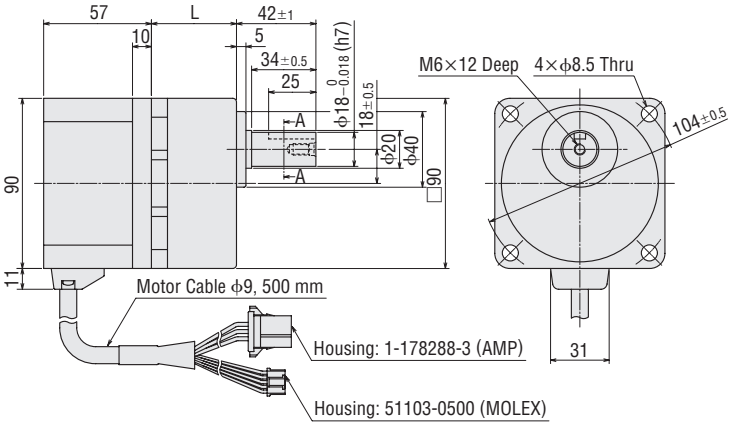

◇Key and Key Slot (Included)

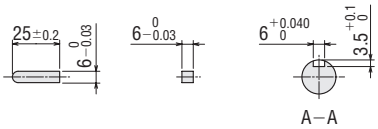

◇Hollow Shaft Flat Gearhead **FR** Gear 100 W

BLHM5100KC-□FR

Motor: BLHM5100KC-GFS

Gearhead: GFS5G□FR

Mass: 3.6 kg

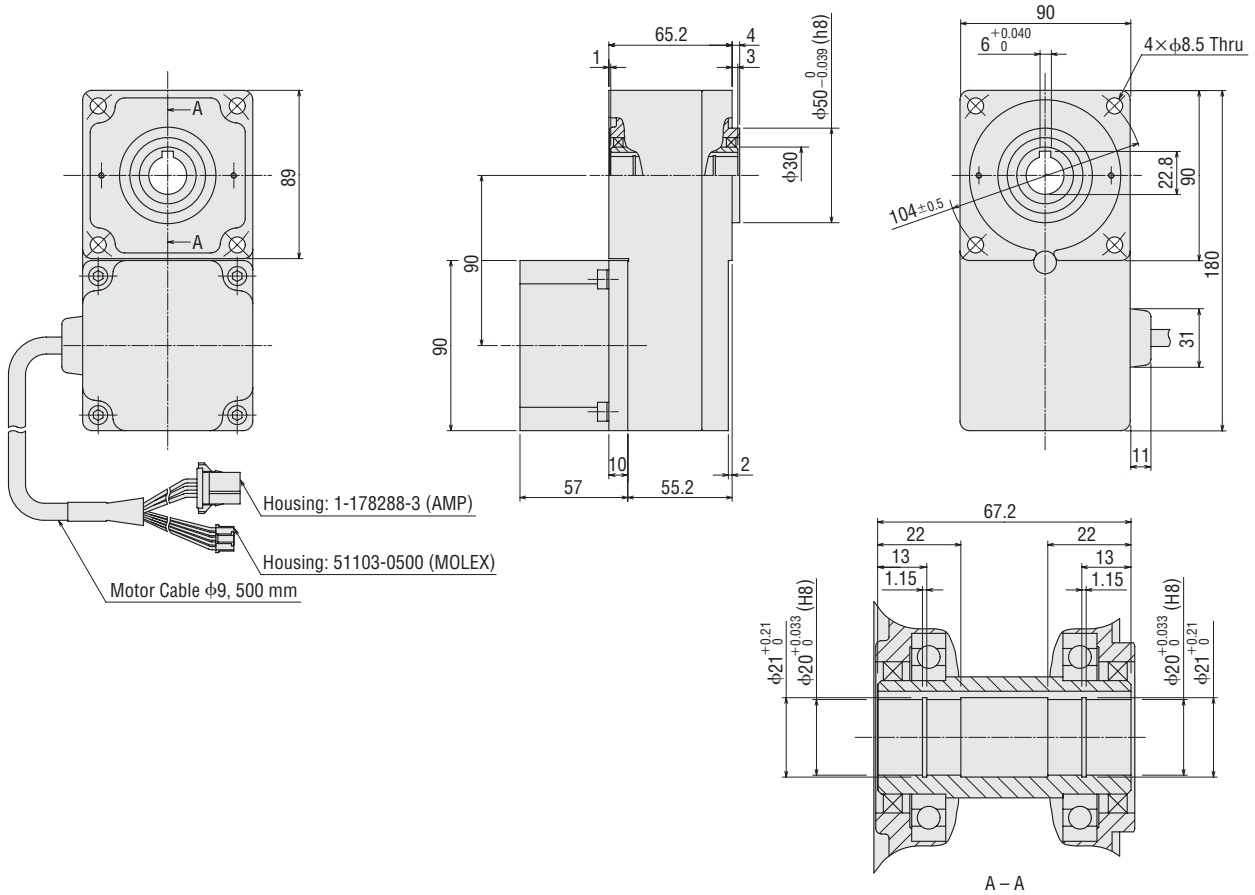

◇Key and Key Slot (Included)

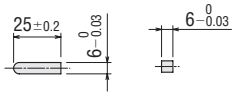

◇Round Shaft Type 100 W

BLHM5100KC-A

Mass: 1.4 kg

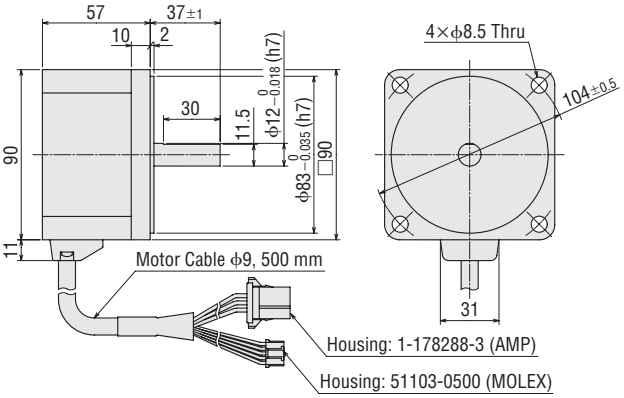

●Motor with Electromagnetic Brake

◇Parallel Shaft Gearhead **GFS** Gear 30 W

Motor Product Name	Gearhead Product Name	Gear Ratio	L	Mass [kg]
BLHM230KCM-GFS	**GFS2G□**	**5 - 20**	34	1.1
		30 - 100	38	1.2
		200	43	1.2

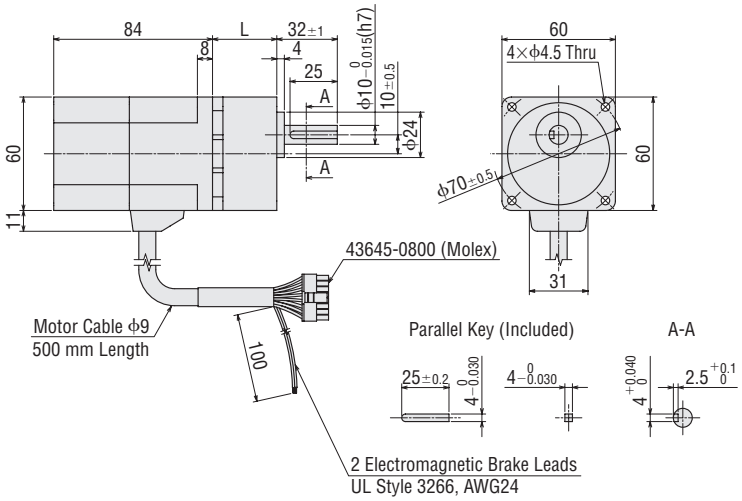

◇Hollow Shaft Flat Gearhead **FR** Gear 30 W

BLHM230KCM-□FR

Motor: BLHM230KCM-GFS

Gearhead: GFS2G□FR

Mass: 1.6 kg

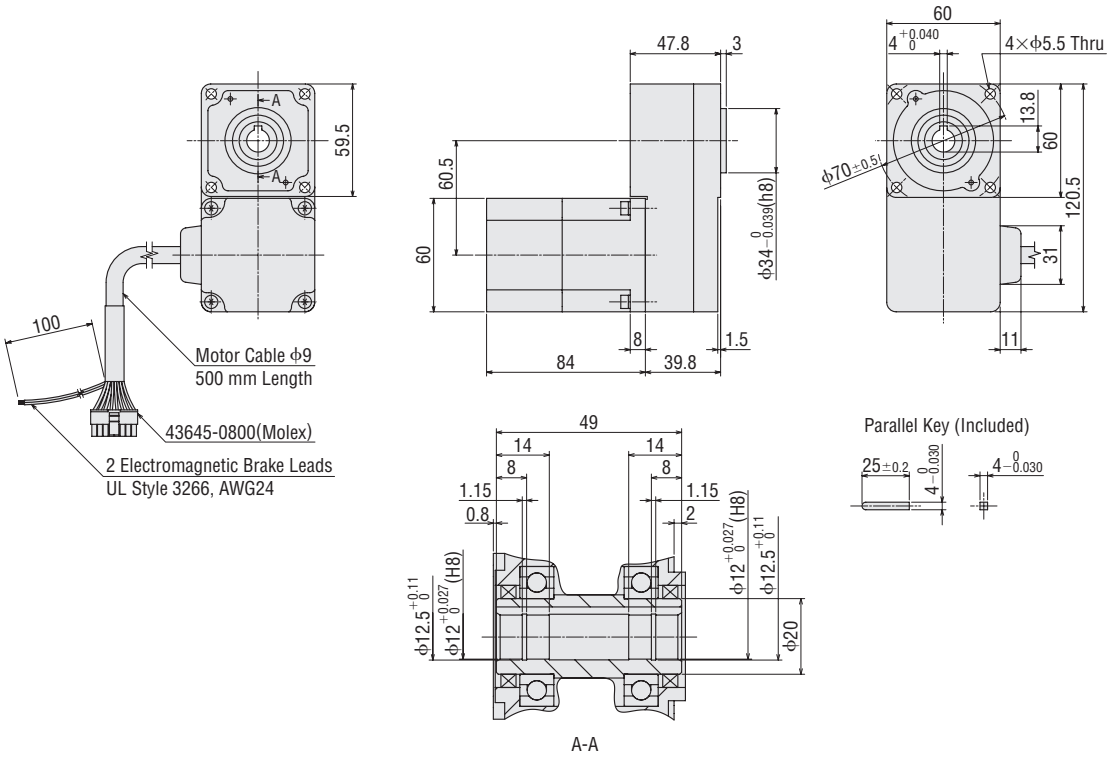

◇Parallel Shaft Gearhead **GFS** Gear 50 W

Motor Product Name	Gearhead Product Name	Gear Ratio	L	Mass [kg]
BLHM450KCM-GFS	**GFS4G□**	**5 - 20**	41	2.0
		30 - 100	46	2.1
		200	51	2.2

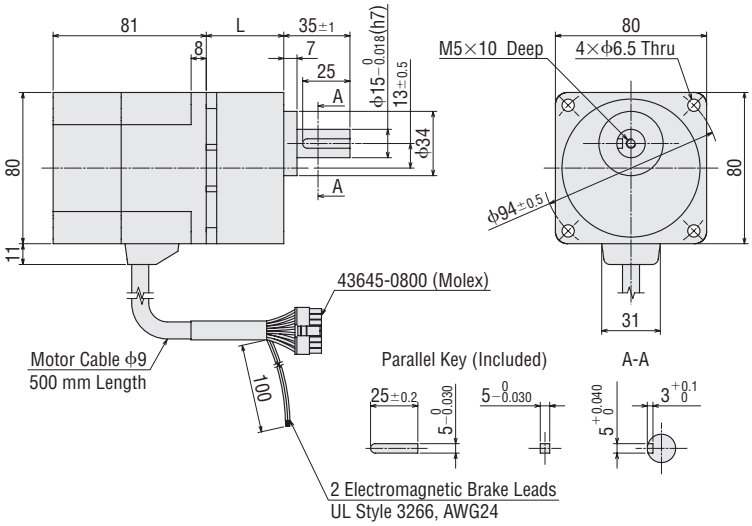

◇Hollow Shaft Flat Gearhead **FR** Gear 50 W

BLHM450KCM-□FR

Motor: BLHM450KCM-GFS

Gearhead: GFS4G□FR

Mass: 2.9 kg

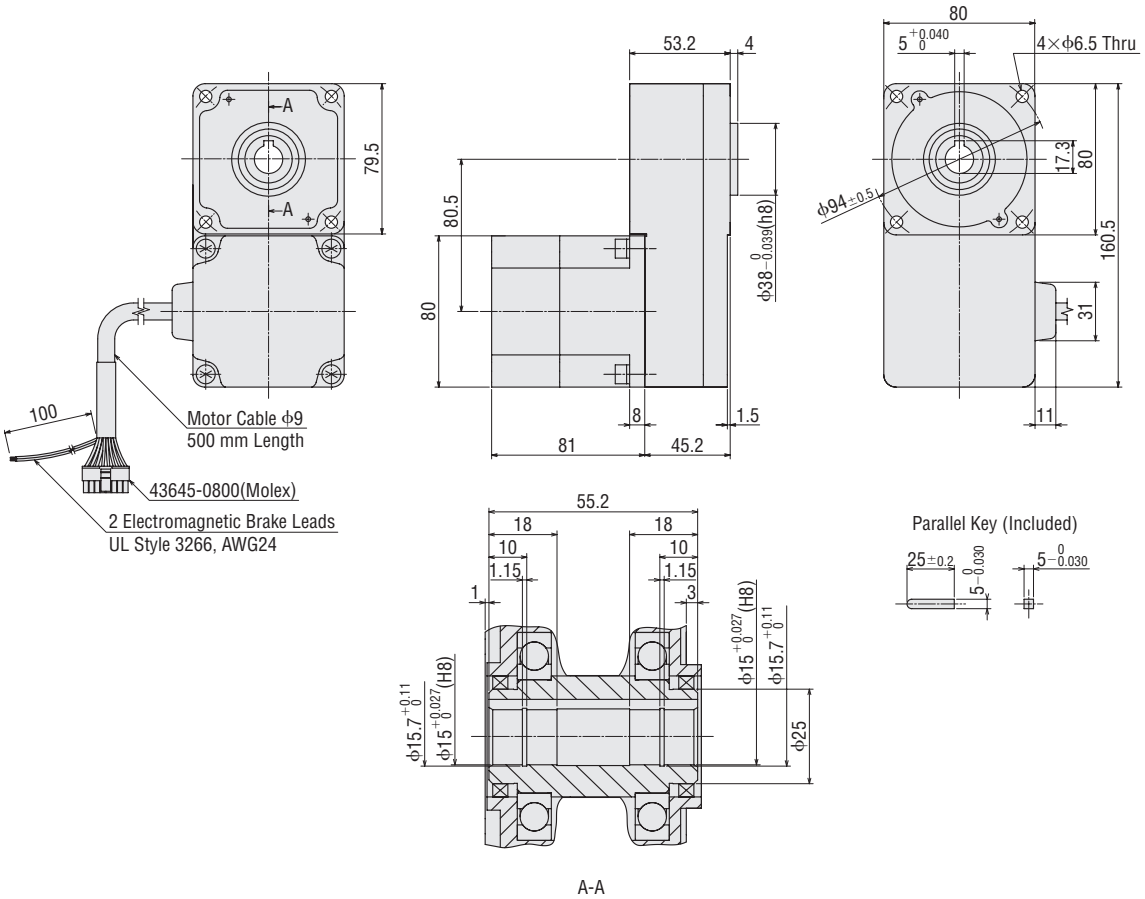

◇Parallel Shaft Gearhead GFS Gear 100 W

Motor Product Name	Gearhead Product Name	Gear Ratio	L	Mass [kg]
BLHM5100KCM-GFS	**GFS5G□**	**5 - 20**	45	3.0
		30 - 100	58	3.3
		200	64	3.4

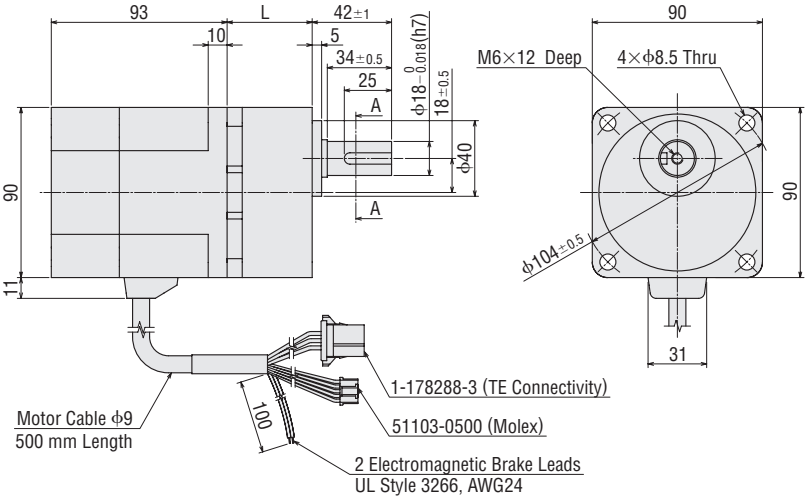

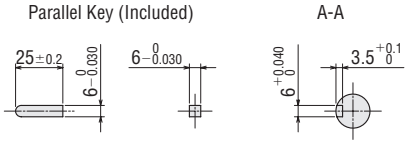

◇Hollow Shaft Flat Gearhead FR Gear 100 W

BLHM5100KCM-□FR

Motor: BLHM5100KCM-GFS
Gearhead: GFS5G□FR
Mass: 4.2 kg

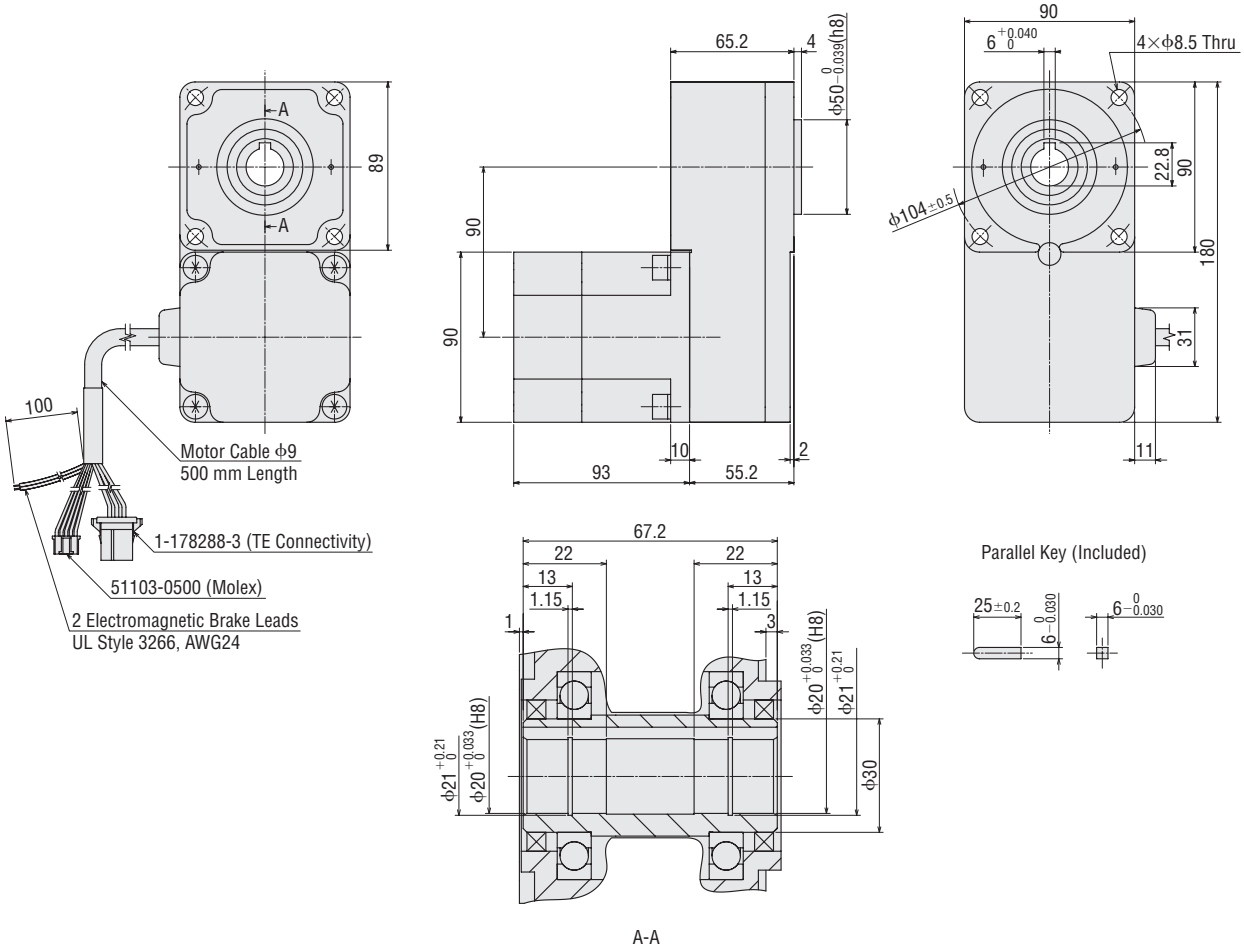

●Driver

◇15 W, 30 W, 50 W

BLH2D15-K, BLH2D30-K, BLH2D50-K
BLH2D15-KD, BLH2D30-KD, BLH2D50-KD
BLH2D15-KR, BLH2D30-KR, BLH2D50-KR

Mass: 46 g

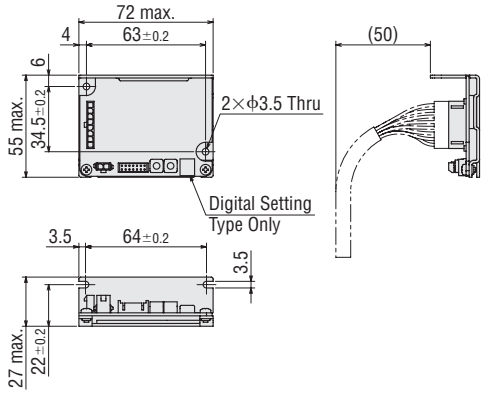

◇100 W

BLHD100K

Mass: 0.3 kg

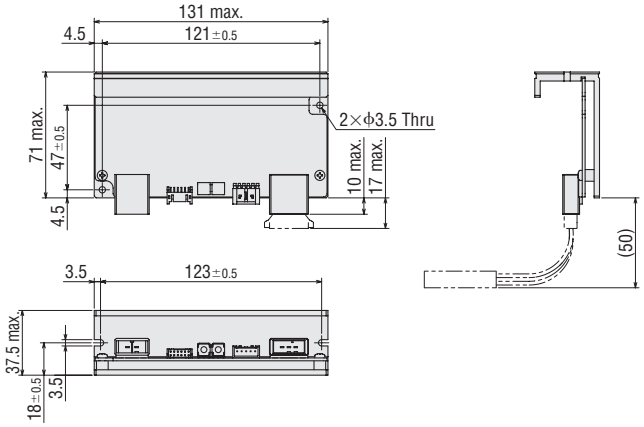

●Connection Cable, Flexible Connection Cable

◇15 W, 30 W, 50 W

CC02BLH / CC02BLHR

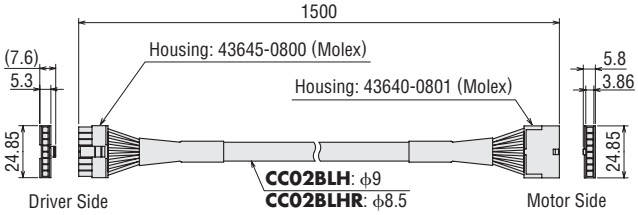

◇100 W

CC02AXH2 / CC02BLH2R

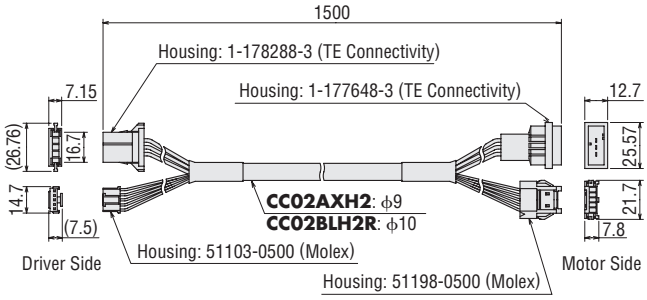

●Power Supply Cable and I/O Signal Cable Set (For 15 W, 30 W, 50 W)

Length [m]	Driver Type	Product Name
0.3	Analogue Setting Type RS-485 Communication Type	**LHS003CC**
	Digital Setting Type	**LHS003CD**
1	Analogue Setting Type RS-485 Communication Type	**LHS010CC**
	Digital Setting Type	**LHS010CD**

◇Power Supply Cable

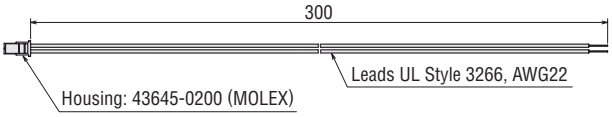

◇I/O Signal Cable

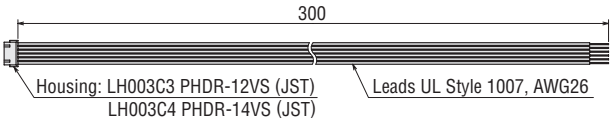

●Power Supply Cable (For 100 W, Included)

LH003C2

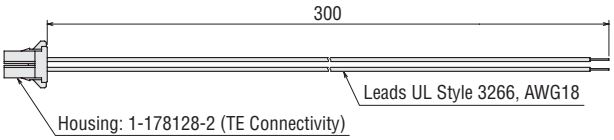

●I/O Signal Cable (For 100 W, Included)

LH003C3

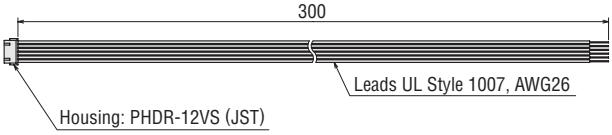

●Installation screw dimensions

L2 is the dimension when a plain washer and a spring washer are mounted on the screw head side.

◇Parallel Shaft Gearhead

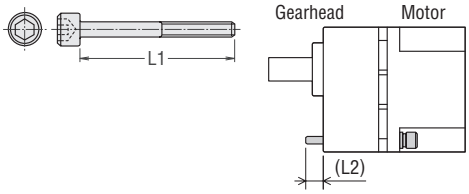

Product Name	Gear Ratio	Installation Screws		L2 [mm]
		Screw Size	L1 [mm]	
GFS2G□	**5 - 20**	M4	50	6
	30 - 100		55	7
	200		60	7
GFS4G□	**5 - 20**	M6	65	13
	30 - 100		70	13
	200		75	13
GFS5G□	**5 - 20**	M8	75	16.5
	30 - 100		90	18.5
	200		95	17.5

●Installation Screws: 4 pieces each of flat washers, spring washers, and hexagonal nuts are included.

◇Hollow Shaft Flat Gearhead

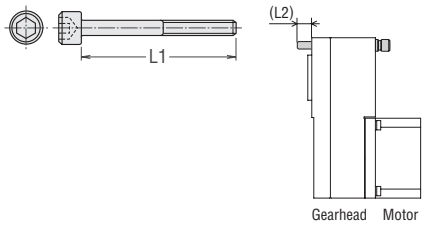

Product Name	Gear Ratio	Installation Screws		L2 [mm]
		Screw Size	L1 [mm]	
GFS2G□FR	**5 - 200**	M5	65	15
GFS4G□FR	**5 - 200**	M6	70	14
GFS5G□FR	**5 - 200**	M8	90	21

●Installation Screws: 4 pieces each of flat washers, spring washers, and hexagonal nuts are included.

Connection and Operation Analogue Setting Type (15 W, 30 W, 50 W)

Names and Functions of Driver Parts

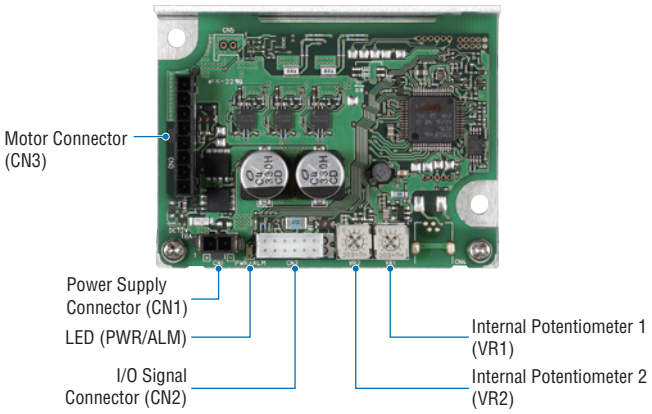

Name	Indication	Description	
Power Supply Connector	CN1	Connects the power supply cable.	
I/O Signal Connector	CN2	Connects the I/O signal cable with an external control device.	
Motor Connector	CN3	Connects the motor cable.	
LED	PWR/ALM	Green	Lit in green while the power is supplied.
		Red (LED Blinks)	If an alarm is generated, this LED will blink in red. The generated alarm content can be checked by counting the number of times the LED blinks.
Internal Potentiometer	VR1	Uses to set the speed (M0 input: ON)	
	VR2	Uses to set the acceleration time and deceleration time.	

◇I/O Signal Connector (CN2)

Pin No.	Colour of Lead Wire	Terminal Name	Signal Name	Description
12	–	–	–	N.C. (No Connection.)
11	Black	DIN0	START/STOP	These signals are used to operate the motor. The motor rotates according to the acceleration time when both the START/STOP input and the RUN/BRAKE input are turned ON. If the START/STOP input is turned OFF, the motor stops according to the deceleration time. If the RUN/BRAKE input is turned OFF, the motor stops instantaneously.
10	White	DIN1	RUN/BRAKE	
9	Gray	DIN2	FWD/REV	This signal is used to change the motor rotation direction. The motor rotates in the CW direction when this signal is turned ON, and in the CCW direction when it is turned OFF.*
8	Light Blue	DIN3	M0	When the M0 input is ON, the setting speed of the internal potentiometer (VR1) is enabled. When it is OFF, the setting speed of the external analogue setting device (External speed potentiometer or external DC voltage) is enabled.
7	Purple	DIN4	ALM-RST	This signal is used to reset the alarm. (The alarm will be reset at the OFF edge of the input.)
6	Blue	VH	External Analogue Setting Device	These signals are used when the rotation speed is externally set using an external analogue setting device (External speed potentiometer or external DC voltage).
5	Green	VM		
4	Yellow	VL		
3	Orange	GND	GND	I/O signals common
2	Red	DOUT0	SPEED-OUT	30 pulses are output while the motor output shaft makes one revolution in synchronization with the motor rotation. The pulse width of output pulse signals is 0.3 ms. The motor rotation speed can be calculated using the SPEED-OUT output.
1	Brown	DOUT1	ALM-B	This is a signal to output an alarm status. It is turned OFF when an alarm is generated. (Normally closed) The generated alarm content can be checked by counting the number of times the LED blinks.

*The rotation direction depends on the gear ratio of the gearhead.

Connection Diagrams

Connection example when connecting an external speed potentiomenter.

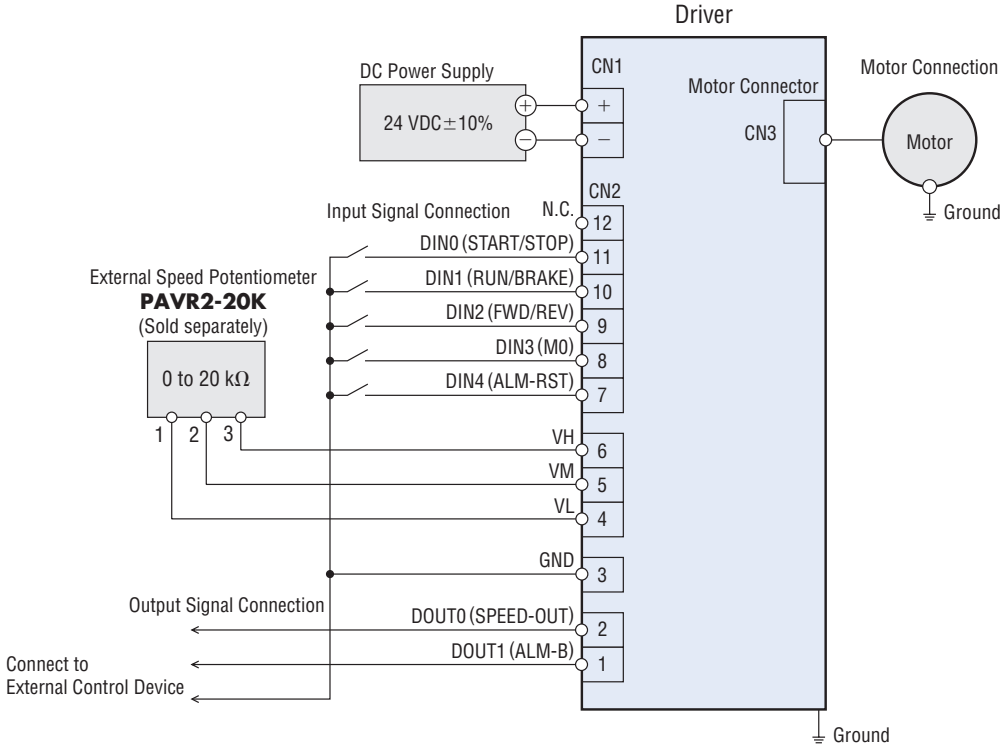

●Run/Stop

Operate the motor with the START/STOP and RUN/BRAKE inputs.
When the RUN/BRAKE Input is shut off during deceleration, the motor will stop instantaneously.
Decelerated Stop: Stopping in accordance with the set deceleration time.
Instantaneous Stop: Stopping in a very short time window regardless of the deceleration time.

	START/STOP Input	RUN/BRAKE Input	Motor Operation
Signal Level	ON	ON	Operation
	ON	OFF	Instantaneous Stop
	OFF	ON	Deceleration Stop

◇Example of Operating Pattern

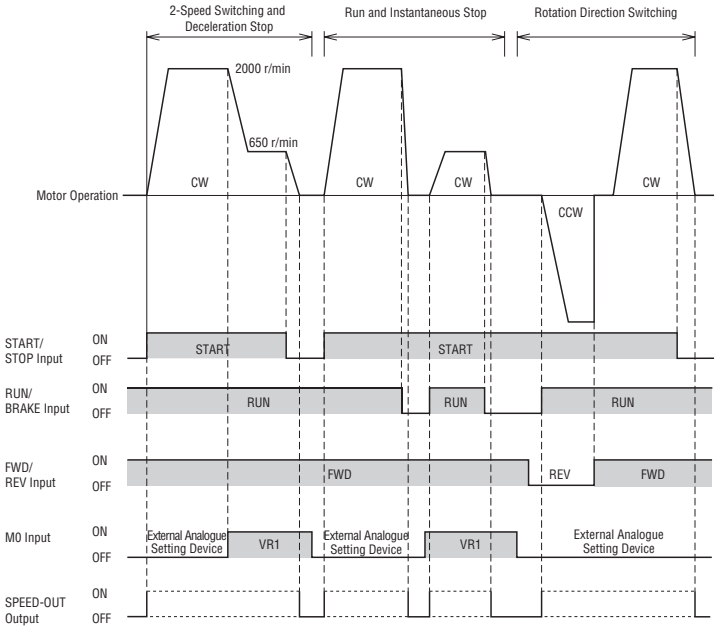

● START/STOP Input, RUN/BRAKE Input
When the START/STOP and RUN/BRAKE inputs are both turned ON, the motor will run. When the START/STOP Input is shut OFF during operation, the motor will execute a decelerated stop in accordance with the settings on the internal potentiometer (VR2). When the RUN/BRAKE Input is shut OFF during operation, the motor will stop in the shortest window of time possible (Instantaneous stop).

● FWD/REV Input
This signal is used to change the rotation direction of the motor. When ON, the motor will turn CW; when OFF, the motor will turn CCW. (The rotation direction varies according to the gear ratio of the gearhead.)

● M0 Input
When the M0 input is turned ON, the motor will rotate in accordance with the internal potentiomenter (VR1). When it shut OFF, the motor will rotate in accordance with the external analogue setting device.

● Please ensure that the ON and OFF durations for each output signal are 10 ms min.

I/O Signal Circuits

◇Input Signal Circuit

The driver's signal input uses the C-MOS input method.
The signal status indicates "ON: 0 to 0.5 V (L Level)" or "OFF: 4 to 5 V (H Level)."

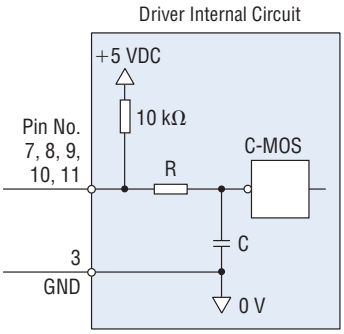

◇Output Signal Circuit

Output signals of the driver are transistor open-collector outputs.
The signal state represents a state of "ON: Carrying current" or "OFF: Not carrying current" for the internal photocoupler rather than the voltage level of the signal.

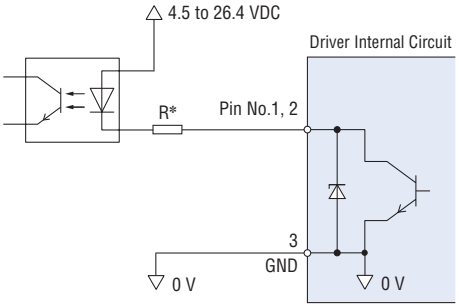

✻ Recommended resistance value when current limiting resistor R is connected
24 VDC: 2.7 kΩ to 4.7 kΩ (1 W)
5 VDC: 560 Ω to 820 Ω (0.25 W)

◇SPEED-OUT

30 pulses are output every revolution of the motor output shaft, synchronized with the rotation of the motor. The pulse width of output pulse signals is 0.3 ms. The motor rotation speed can be calculated using the SPEED-OUT output.

$$\text{Frequency of SPEED-OUT [Hz]} = \frac{1}{T\ [s]}$$

$$\text{Motor Speed [r/min]} = \frac{\text{Frequency of SPEED-OUT [Hz]}}{30} \times 60$$

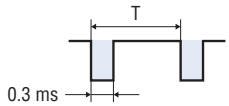

◇Alarm Reset

Before resetting an alarm using one of the following methods, be sure to resolve the cause of the alarm and ensure conditions are safe.

- Turn the ALM-RST input from ON to OFF. (The alarm will be reset at the OFF edge of the input.)
- Turn on the power again.

●Speed Setting Methods

The motor speed can be set using an external analogue setting device (An external speed potentiometer or external DC voltage) or VR1.
It is possible to switch between external analogue speed setting and VR1, depending on whether the M0 input is ON or OFF.

M0 Input	OFF	ON
Speed Setting	External Analogue Setting Device	VR1

◇Setting by External Speed Potentiometer

Connect to pin No. 4 to 6 of CN2.

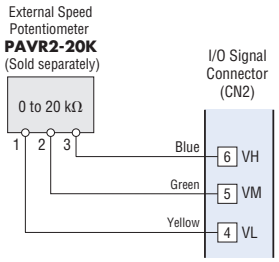

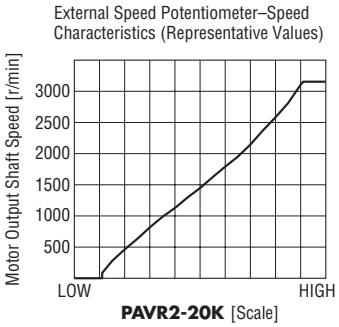

Note

●The speed in the graph represents the speed of the motor alone. The gear output shaft speed is calculated by dividing the gear ratio.

◇Setting by External DC Voltage

Connect to pin No. 4 and 5 of CN2.

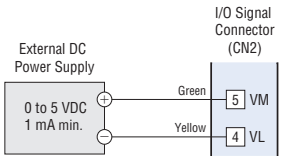

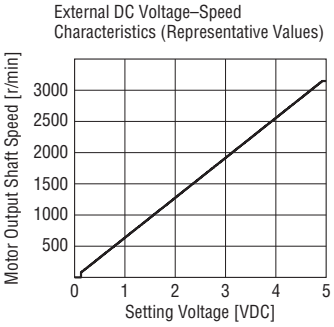

Note

●The speed in the graph represents the speed of the motor alone. The gear output shaft speed is calculated by dividing the gear ratio.

◇Setting by VR1

Factory setting: 0 r/min

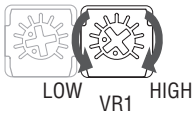

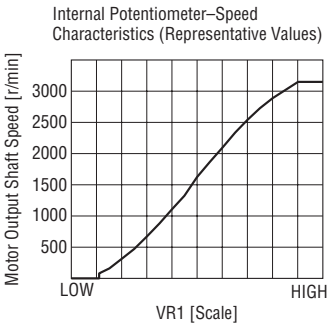

Note

●The speed in the graph represents the speed of the motor alone.
The gear output shaft speed is calculated by dividing the gear ratio.

●Setting the Acceleration and Deceleration Times

The acceleration time is set as a time needed for the motor to reach the rated rotation speed from a standstill state. The deceleration time is set as a time needed for the motor to stop from the rated rotation speed. The actual acceleration time and deceleration time are affected by customer's conditions of use, load inertia, and load torque. The setting range is 0.1 s to 12.0 s.
Factory setting: 0.1 s

◇VR2 settings

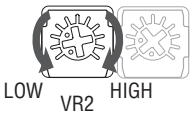

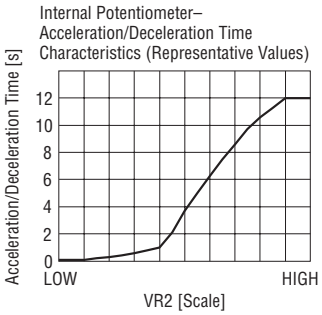

●Multi-Motor Control

Two or more motors can be operated at the same speed using 1 external speed potentiometer or external DC voltage.

◇When Using an External Speed Potentiometer

When using a external speed potentiometer (VRx), no more than ten motors should be operated simultaneously.

Resistance value when the number of drivers is n:
VRx (kΩ)=20 kΩ/n,
acceptable loss (W)=n/4
Example: 10 kΩ , 1/2 W for 2 drivers.

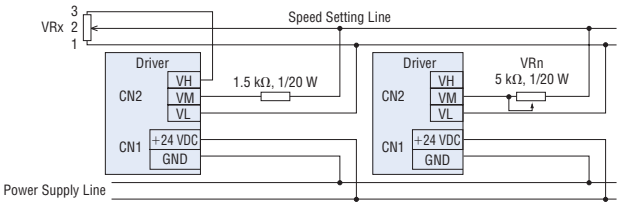

◇When Using an External DC Voltage

The current capacity of the DC power supply is determined as follows.

Current capacity (mA) when the number of drivers is n: 1 mA×n
Example: When two drivers are used, the current capacity should be 2 mA min.

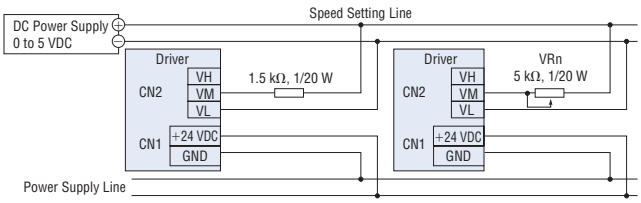

Connection and Operation Analogue Setting Type (100 W)

Names and Functions of Driver Parts

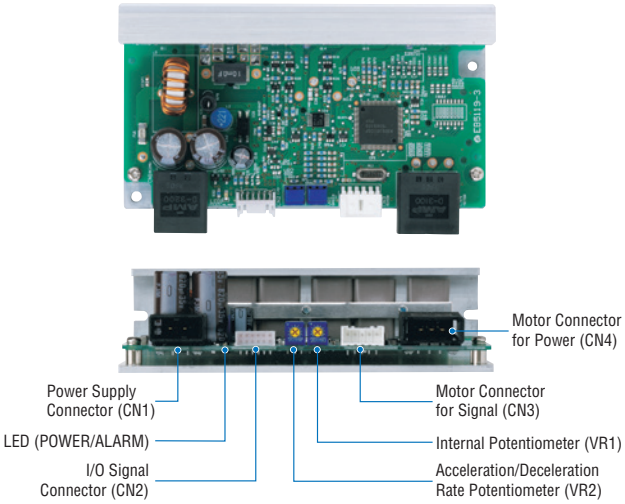

Name	Indication	Description	
Power Supply Connector	CN1	Connects the power supply cable.	
I/O Signal Connector	CN2	Connects the I/O signal cable to connect with an external control device.	
Motor Connector for Signal	CN3	Connects the power supply cable.	
Motor Connector for Power	CN4		
LED	POWER/ ALARM	Green	Lit in green while the power is supplied.
		Green (Blinks)	If an alarm is generated, this LED will blink in green. The generated alarm content can be checked by counting the number of times the LED blinks.
Internal Speed Potentiometer	VR1	Used to set the speed (M0 input: ON)	
Acceleration/ Deceleration Rate Potentiometer	VR2	Used to set the acceleration and deceleration rate.	

◇I/O Signal Connector (CN2)

Pin No.	Colour of Lead Wire	Terminal Name	Description
12	–	–	N.C. (No Connection.)
11	Black	START/STOP	These signals are used to operate the motor. The motor rotates according to the acceleration rate when both the START/STOP input and the RUN/BRAKE input are turned ON. If the START/STOP input is turned OFF, the motor stops according to the deceleration rate. If the RUN/BRAKE input is turned OFF, the motor stops instantaneously.
10	White	RUN/BRAKE	
9	Gray	CW/CCW	This signal is used to change the motor rotation direction. When this signal is turned ON, the motor rotates in the CW direction, and when turned OFF, it rotates in the CCW direction.*
8	Light Blue	INT.VR/EXT	When the INT. VR/EXT input is ON, the setting speed of the internal speed potentiometer (VR1) is enabled. When OFF, the setting speed of the external speed potentiometer and the external DC voltage is enabled.
7	Purple	ALARM-RESET	This signal is used to reset the alarm. (The alarm will be reset at the OFF edge of the input.)
6	Blue	VRH	These signals are used to set the speed externally using the external speed potentiometer or external DC voltage.
5	Green	VRM	
4	Yellow	VRL	
3	Orange	GND	I/O signals common
2	Red	SPEED	30 pulses are output while the motor output shaft makes one revolution, in synchronization with the motor rotation.
1	Brown	ALARM	This is a signal to output an alarm status. It is turned OFF when an alarm is generated, and the motor stops. The generated alarm content can be checked by counting the number of times the LED blinks.

*The rotation direction depends on the gear ratio of the gearhead.

Connection Diagrams

Connection example when connecting an external speed potentiomenter.

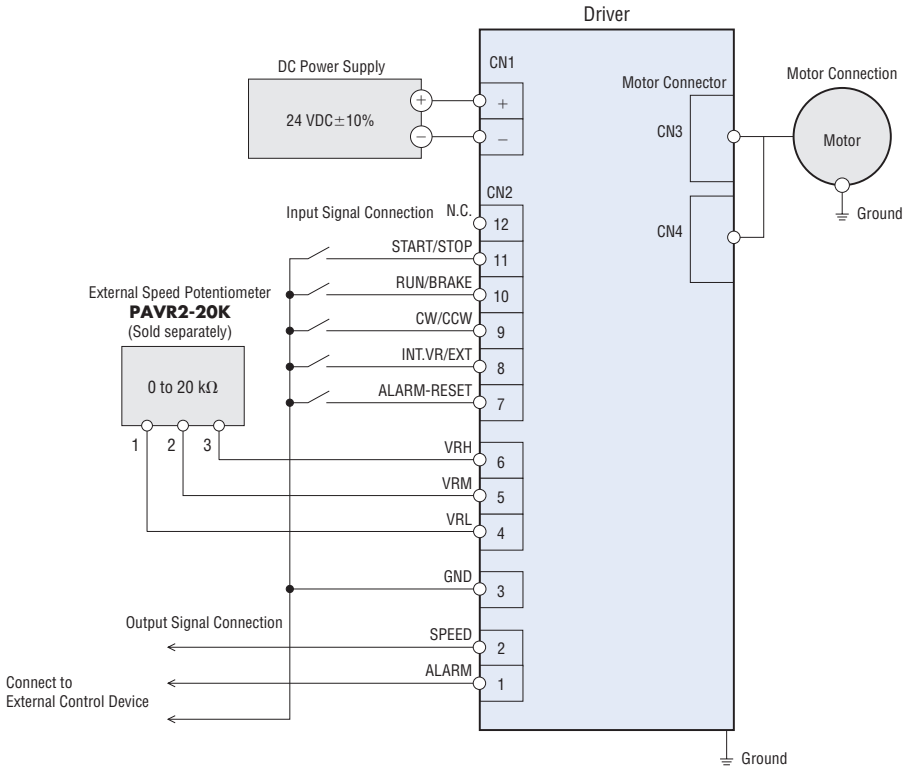

●Run/Stop

Operate the motor with the START/STOP and RUN/BRAKE inputs.

	START/STOP Input	RUN/BRAKE Input	Motor Operation
Signal Level	ON	ON	Operation*1
	ON	OFF	Instantaneous Stop
	OFF	ON	Stop*2

*1 The operating speed of the motor is set by either one of the internal speed potentiometer, external speed potentiometer, or external DC voltage. Acceleration is performed at the rate set in the acceleration/deceleration time potentiometer.

*2 Deceleration is performed at the rate set in the acceleration/deceleration time potentiometer.

◇Example of Operating Pattern

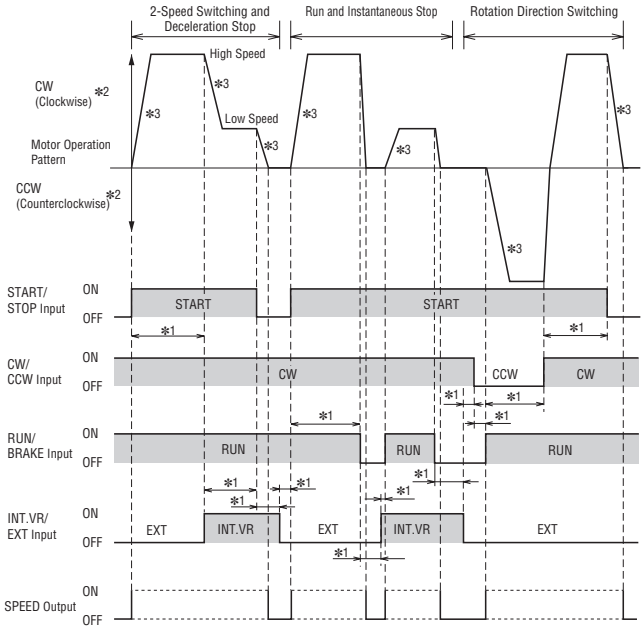

*1 10 ms min.

*2 The direction of rotation applies to the motor only. Gearhead shaft rotation direction will vary depending on the gear ratio.

*3 The motor will start and stop at the time set by the acceleration and deceleration rate potentiometer.

● START/STOP Input, RUN/BRAKE Input

When the START/STOP and RUN/BRAKE inputs are both turned ON, the motor will run.

When the START/STOP Input is shut OFF during operation, the motor will execute a decelerated stop in accordance with the settings on the acceleration and deceleration potentiometer (VR2).

When the RUN/BRAKE Input is shut OFF during operation, the motor will stop in the shortest window of time possible (Instantaneous stop).

● CW/CCW Input

This signal is used to change the rotation direction of the motor. When ON, the motor will turn CW; when OFF, the motor will turn CCW. (The rotation direction varies according to the gear ratio of the gearhead.)

● INT. VR/EXT Input

When the INT.VR/EXT Input is turned ON, the set speed for the internal potentiomenter (VR1) is enabled. When it shut OFF, the set speed for the external speed potentiometer or the external DC voltage is enabled.

● Please ensure that the ON and OFF durations for each output signal are 10 ms min.

●I/O Signal Circuit

◇Input Signal Circuit

The driver's signal input uses the C-MOS input method.

The signal status indicates "ON: 0 to 0.5 V (L Level)" or "OFF: 4 to 5 V (H Level)."

• External control device output: 5 VDC C-MOS

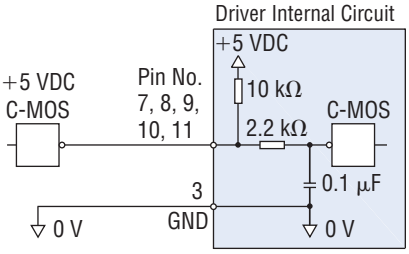

• External control device output: Open-collector output

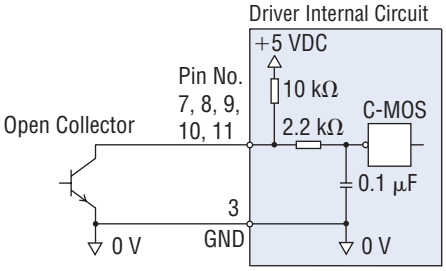

• Switch Connection

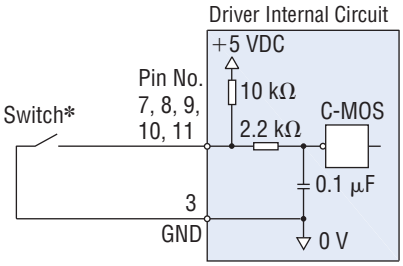

*Please use a switch capable of opening/closing the current flow at 5 VDC, 1 mA max.

◇Output Signal Circuit

Output signals of the driver are transistor open-collector outputs. The signal state represents a state of "ON: Carrying current" or "OFF: Not carrying current" for the internal photocoupler rather than the voltage level of the signal.

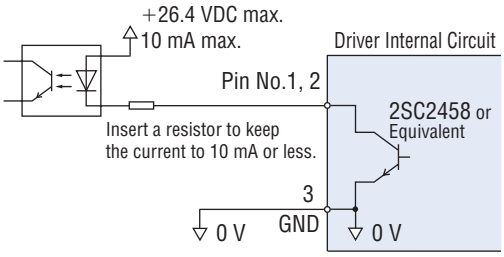

◇SPEED-OUT

30 pulses are output every revolution of the motor output shaft, synchronized with the rotation of the motor. The pulse width of output pulse signals is 0.3 ms. The motor rotation speed can be calculated using the SPEED-OUT output.

$$\text{Motor Speed [r/min]} = \frac{\text{Frequency of SPEED-OUT [Hz]}}{30} \times 60$$

$$\text{Frequency of SPEED-OUT [Hz]} = \frac{1}{\text{T [s]}}$$

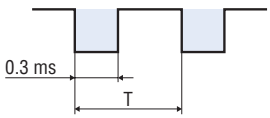

◇ALARM-RESET

Before resetting an alarm using one of the following methods, be sure to resolve the cause of the alarm and ensure conditions are safe.

• Turn the ALM-RST input from ON to OFF. (The alarm will be reset at the OFF edge of the input.)

• Turn on the power again.

●Speed Setting Method

The motor speed can be set using any of the following: the internal speed potentiometer, the external speed potentiometer or the external DC voltage. The speed potentiometer can be switched by turning the INT.VR/EXT input ON or OFF.

◇Setting by the Internal Speed Potentiometer

Factory setting: 0 r/min

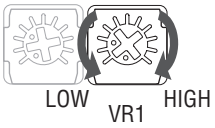

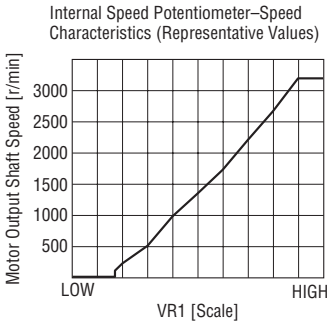

Note

●The speed in the graph represents the speed of the motor alone. The gear output shaft speed is calculated by dividing the gear ratio.

◇Setting by the External Speed Potentiometer

Connect to pin No. 4 to 6 of CN2.

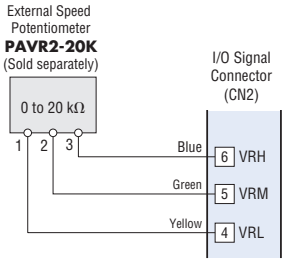

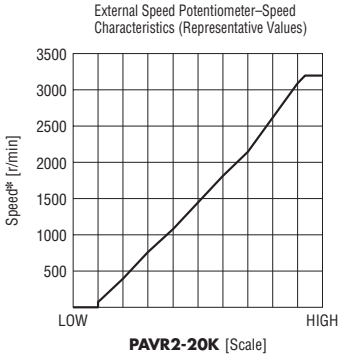

Note

●The speed in the graph represents the speed of the motor alone. The gear output shaft speed is calculated by dividing the gear ratio.

◇Setting by External DC Voltage

Connect to pin No. 4 and 5 of CN2.

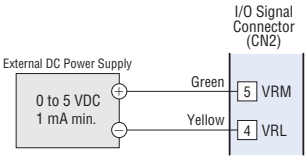

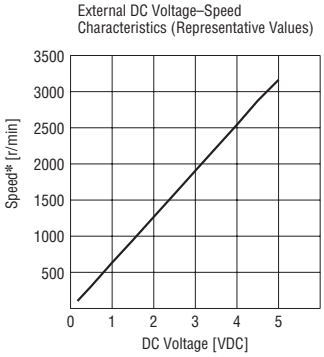

Note

●The speed in the graph represents the speed of the motor alone.
The gear output shaft speed is calculated by dividing the gear ratio.

●Setting the Acceleration and Deceleration Times

The acceleration time is set as a time needed for the motor to reach the rated rotation speed from a standstill state. The deceleration time is set as a time needed for the motor to stop from the rated rotation speed. The actual acceleration time and deceleration time are affected by customer's conditions of use, load inertia, and load torque. The setting range is 0.1 s to 12.0 s.

Factory setting: 0.1 s

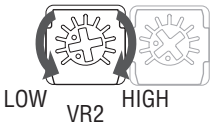

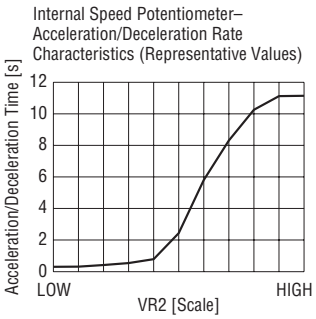

●Multi-Motor Control

Two or more motors can be operated at the same speed using 1 external speed potentiometer or external DC voltage.

◇When Using an External Speed Potentiometer

When using a external speed potentiometer (VRx), no more than five motors should be operated simultaneously.

Resistance value when the number of drivers is n:

VRx (kΩ)=20 kΩ/n,

acceptable loss (W)=n/4

Example: 10 kΩ , 1/2 W for 2 drivers.

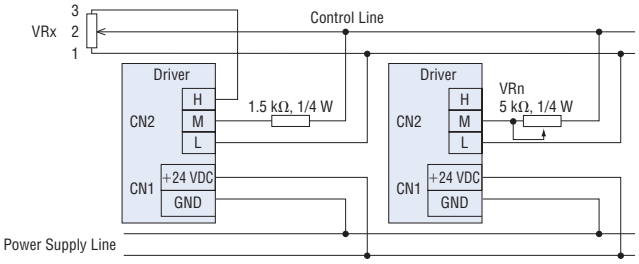

◇When Using an External DC Voltage

The current capacity of the DC power supply is determined as follows.

Current capacity (mA) when the number of drivers is n: 1 mA×n

Example: When two drivers are used, the current capacity should be 2 mA min.

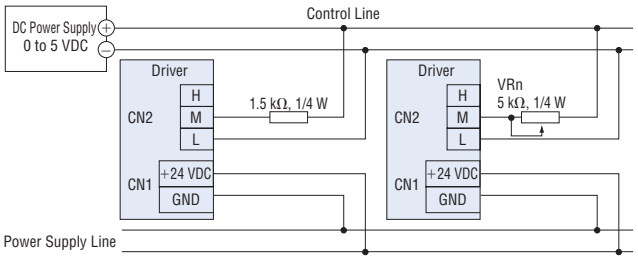

Connection and Operation Digital Setting Type (15 W, 30 W, 50 W)

Names and Functions of Driver Parts

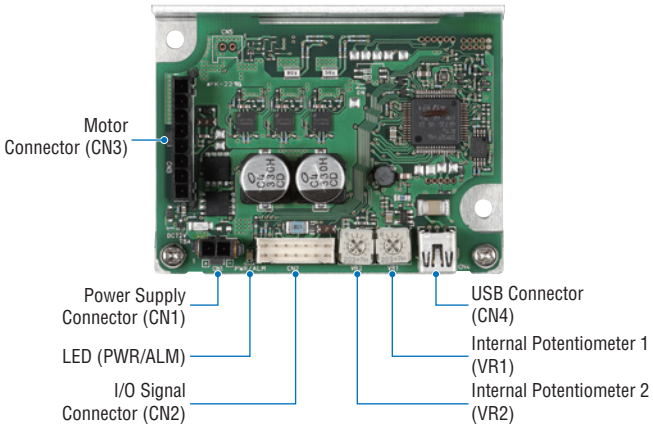

Name	Indication	Description	
Power Supply Connector	CN1	Connects the power supply cable.	
I/O Signal Connector	CN2	Connects the I/O signal cable to connect with an external control device.	
Motor Connector	CN3	Connects the motor cable.	
USB Connector	CN4	Connects a PC in which **MEXE02** has been installed.	
LED	PWR/ALM	Green	Lit in green while the power is supplied.
		Red (Blinks)	If an alarm is generated, this LED will blink in red.
		Orange (Blinks)	If information is generated, it will blink in orange.
Internal Potentiometer*	VR1	Used to set the operation data. Factory setting: The rotation speed in the operation data No.1 can be set.	
	VR2	Used to set the operation data. Factory setting: The acceleration time and deceleration time in the operation data No.0 and No.1 can be set.	

*The function can be changed using **MEXE02**.

◇I/O Signal Connector (CN2)

Pin No.	Color of Lead Wire	Terminal Name	Initial Assignment Signal*1	Description
14	Yellow/Black	DIN0	[START/STOP]	These signals are used to operate the motor. The motor rotates according to the acceleration rate when both the START/STOP input and the RUN/BRAKE input are turned ON. If the START/STOP input is turned OFF, the motor stops according to the deceleration rate. If the RUN/BRAKE input is turned OFF, the motor stops instantaneously.
13	Orange/White	DIN1	[RUN/BRAKE]	
12	Red/White	DIN2	[FWD/REV]	This signal is used to change the motor rotation direction. The motor rotates in the forward direction when the signal is turned ON.*2
11	Brown/White	DIN3	[M0]	The operation data number can be selected based on a combination of ON/OFF status of the M0 and M1 inputs.
10	Black	DIN4	[M1]	
9	White	DIN5	[ALM-RST]	This signal is used to reset the alarm. (The alarm will be reset at the ON edge of the input.)
8	Gray	VH	External Analogue Setting Device*3	These terminals are used when the rotation speed or torque limiting value is externally set using an external analogue setting device (External speed potentiometer or external DC voltage).
7	Purple	VM		
6	Blue	VL		
5	Green	GND	GND	I/O signals common
4	Yellow	DOUT0	[SPEED-OUT]	30 pulses are output while the motor output shaft makes one revolution.
3	Orange	DOUT1	[ALM-B]	This is a signal to output an alarm status. It is turned OFF when an alarm is generated. (Normally closed)
2	Red	DOUT2	[TLC]	This is a signal to output when the motor output torque is limited.*4
1	Brown	DOUT3	[DIR]	This is a signal to output information on the motor rotation direction. (It is turned ON when the motor rotates in the forward direction.)

*1 Shown in brackets [ ] are signals assigned at the time of shipment. Functions for the pin No. 1 to No. 4 and No. 9 to No. 14 can be changed using **MEXE02**.
*2 The rotation direction of the output shaft varies depending on the gear ratio of the gearhead.
*3 If the "External setting method" parameter is changed, the speed and torque limiting value can be set with the PWM signal input.
*4 The torque limiting value is set to 200% at the time of shipment and can be changed using **MEXE02**.

◇USB Cable (CN4)

•USB Cable Specifications

Specifications	USB 2.0 (Full Speed)
Cable	Length: 3 m max.
	Shape: A to mini-B

Connection Diagrams

Connection example when connecting an external speed potentiomenter.

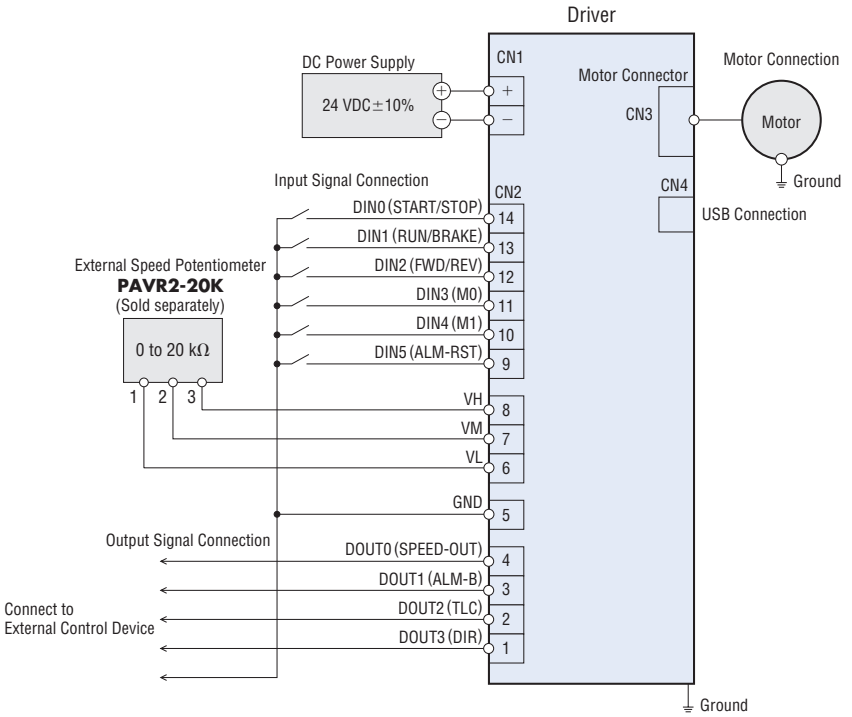

For detailed information and handling precautions of this product, see the Operation Manual. The Operation Manual is available for download from the Oriental Motor website.

Connection and Operation RS-485 Communication Type (15 W, 30 W, 50 W)

Names and Functions of Driver Parts

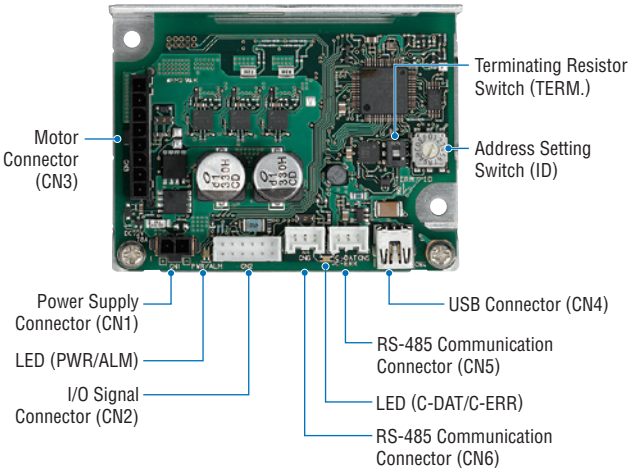

Name	Indication	Description	
Power Supply Connector	CN1	Connects the power supply cable.	
I/O Signal Connector	CN2	Connects the I/O signal cable to connect with an external control device.	
Motor Connector	CN3	Connects the motor cable.	
USB Connector	CN4	Connects a PC in which **MEXE02** has been installed.	
RS-485 Communication Connector	CN5	Connects the communication cable to connect with an external control device, or connect another driver with daisy chain.	
	CN6		
LED	PWR/ ALM	Green	Lit in green while the power is supplied.
		Red (Blinks)	If an alarm is generated, this LED will blink in red.
		Orange (Blinks)	If information is generated, it will blink in orange.
	C-DAT C-ERR	Green (Lighting)	When communication data is being sent or received.
		Red (Lighting)	When communication data is in error.
Address Setting Switch	ID	Set the address number when RS-485 communication is used. Factory setting: 1 (0 to F)	
Terminating Resistor Switch	TERM.	Set the terminal resistor (120 Ω) of RS-485 communication. Factory setting: OFF (OFF: Disable, ON: Effective)	

◇I/O Signal Connector (CN2)

Pin No.	Color of Lead Wire	Terminal Name	Initial Assignment Signal *1	Description
12	–	–	–	N.C. (No Connection.)
11	Black	D-IN0	START/STOP	These signals are used to operate the motor. The motor rotates according to the acceleration time when both the START/STOP input and the RUN/BRAKE input are turned ON. If the START/STOP input is turned OFF, the motor stops according to the deceleration time. If the RUN/BRAKE input is turned OFF, the motor stops instantaneously.
10	White	D-IN1	RUN/BRAKE	
9	Gray	D-IN2	FWD/REV	This signal is used to change the motor rotation direction. The motor rotates in the FWD (CW) direction when the signal is turned ON.*2
8	Light Blue	D-IN3	M0	This signal is used to select the data number of motor operation.
7	Purple	D-IN4	ALM-RST	This signal is used to reset the alarm. (The alarm will be reset at the ON edge of the input.)
6	Blue	VH	External Analogue Setting Device *3	Connect the external analogue setting device (external speed potentiometer or external DC voltage) to set the speed or torque limiting value externally.
5	Green	VM		
4	Yellow	VL		
3	Orange	GND	GND	I/O signals common
2	Red	D-OUT0	SPEED-OUT	30 pulses are output while the motor output shaft makes one revolution in synchronization with the motor rotation.
1	Brown	D-OUT1	ALM-B	This is a signal to output an alarm status. It is turned OFF when an alarm is generated, and the motor stops (normally closed).

*1 Functions for the pin No.1, No.2 and No.7 to No.11 can be changed using the **MEXE02** or RS-485 communication.
*2 The rotation direction depends on the gear ratio of the gearhead.
*3 If the "External setting method" parameter is changed, the speed and torque limiting value can be set with the PWM signal input.

◇USB Cable (CN4)

• USB Cable Specifications

Specifications	USB 2.0 (Full Speed)
Cable	Length: 3 m max.
	Shape: A to mini-B

◇RS-485 Communication Connector (CN5, CN6)

Connect the RS-485 communication cable to the CN5 connector or the CN6 connector on the driver. The vacant connector can be used to connect to a different driver.
RS-485 communication cables for connection (sold separately) are available.

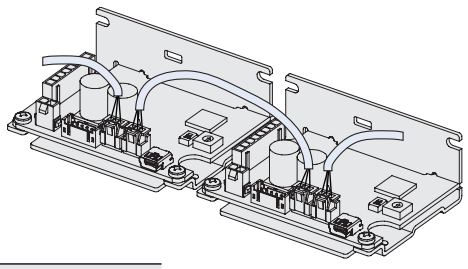

• Input Circuit and Sample Connection

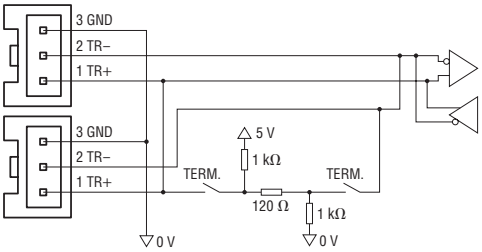

Pin No.	Signal Name	Descriptions
1	TR+	RS-485 Communication Signal (+)
2	TR-	RS-485 Communication Signal (-)
3	GND	GND

◇Address Setting Switch (ID)

Set the address number (slave address) using the address setting switch. Set the address number (slave address) so that it does not overlap. Address number "0" is reserved by broadcast and should not be used.

ID Switch	Address Number
0	Not used
1	1 (Factory Setting)
2	2
3	3
4	4
5	5
6	6
7	7

ID Switch	Address Number
8	8
9	9
A	10
B	11
C	12
D	13
E	14
F	15

●Connection Diagram

An example of I/O signal connection with the host controller is shown below.
Use a sink connection for the I/O signal connection method between the **BLH** Series RS-485 communication type and the host controller. (Source connection is not supported.)

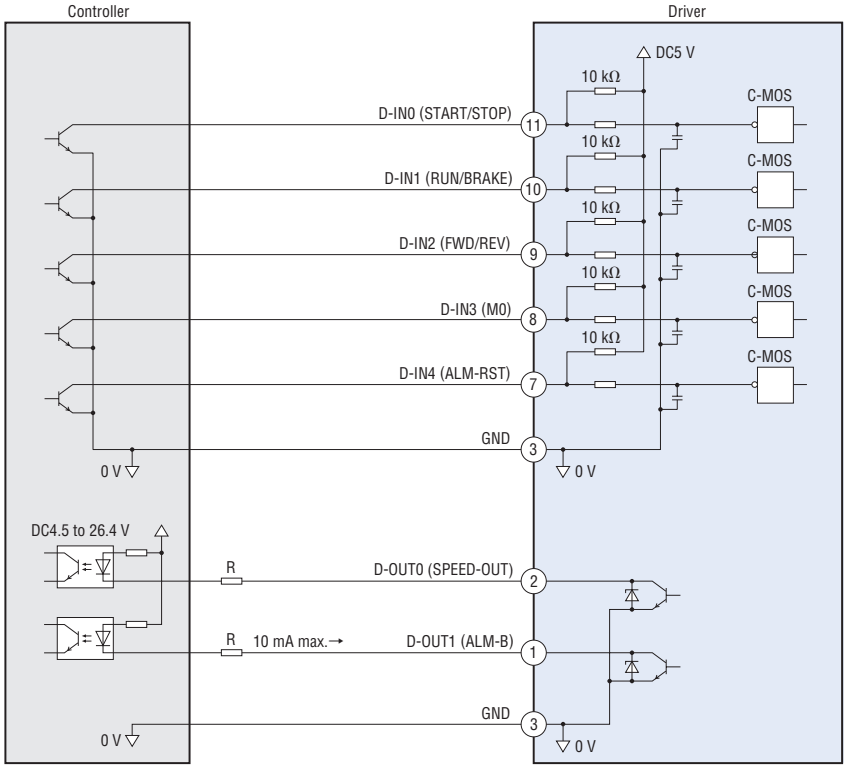

Note

Make sure that the current value of the output signal is 10 mA or less. When the current value exceeds 10 mA, connect an external current limiting resistor R.

For detailed information and handling precautions of this product, see the Operation Manual. The Operation Manual is available for download from the Oriental Motor website.

Installing a Load to the Hollow Shaft

How to Install a Load Shaft

- Install the load shaft to the hollow output shaft by aligning the center of the hollow shaft with that of the load shaft.
- The hollow output shaft has a key slot. Machine a matching key slot on the load shaft and use the supplied key to affix the two shafts across the slots.
- The recommended tolerance of the load shaft is h7.
- If the motor is intended to receive large impacts due to frequent instantaneous stops or carry a large radial load, use a stepped load shaft.
- The load shaft can be installed from both the front and rear faces of the hollow shaft flat gearheads.

Note

- When installing the load shaft to the hollow output shaft, be careful not to damage the hollow output shaft or bearing.
- To prevent seizing, apply a coat of molybdenum disulfide grease on the exterior surface of the load shaft and interior surface of the hollow output shaft.
- Do not attempt to modify or machine the hollow output shaft. Doing so may damage the bearing and cause the hollow shaft flat gearhead to break.

◇Stepped Load Shaft

Install a hexagonal socket head screw over a stopper ring, spacer, flat washer and spring washer and tighten the screw to affix the load shaft.

Example of Front Face Installation

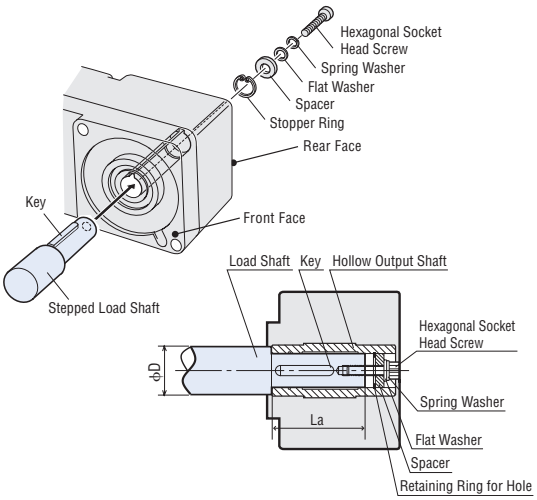

◇Straight Load Shaft

Install a hexagonal socket head screw over a stopper ring, spacer, flat washer and spring washer, with a spacer also inserted underneath the load shaft, and tighten the screw to affix to the load shaft.

Example of Front Face Installation

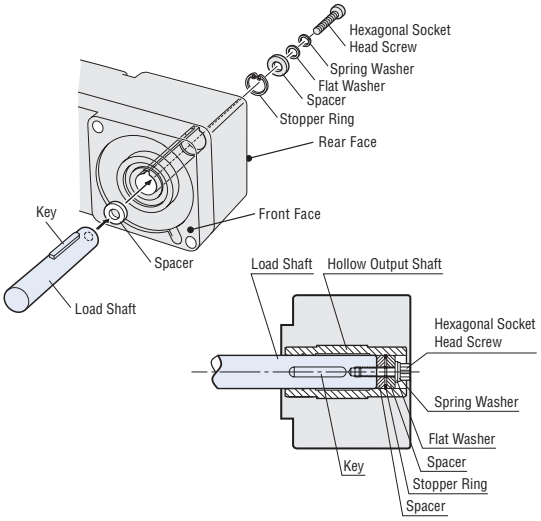

◇Recommended Load Shaft Installation Dimensions

Unit: mm

Product Name	GFS2G□FR	GFS4G□FR	GFS5G□FR
Inner Diameter of Hollow Shaft (H8)	$\phi 12^{+0.027}_{0}$	$\phi 15^{+0.027}_{0}$	$\phi 20^{+0.033}_{0}$
Shaft Diameter of Load Shaft (h7)	$\phi 12^{0}_{-0.018}$	$\phi 15^{0}_{-0.018}$	$\phi 20^{0}_{-0.021}$
Screw Size	M4	M5	M6
Spacer Thickness*	3	4	5
Nominal Hole Diameter of Retaining Ring	ϕ12 (C-Shaped)	ϕ15 (C-Shaped)	ϕ20 (C-Shaped)
Outer Diameter of Stepped Shaft ϕD	20	25	30
Stepped Shaft La Length	39	43	52

*Determine the spacer thickness in line with the table. If the spacer is thicker than the specified dimensions, the screw head may protrude outside of the gear case and the safety cover may not be installed.

- Retaining rings for holes, spacers, screws and other parts used to install the load shaft are not included. The customer must supply these.

Permissible Radial Load Calculation of the Hollow Shaft Type

The formula for permissible radial load varies depending on the mechanism.

◇When End of Shaft being Driven is Not Supported by a Bearing

This mechanism experiences the highest amount of radial load. The stepped type is recommended for the load shaft.

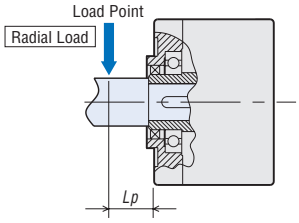

F0 [N]: Permissible Radial Load at the Flange-Mounting Surface

Lp [mm]: Distance from Flange-Mounting Surface to Radial Load Point

B [mm]: Distance from Flange-Mounting Surface to Bearing Unit

Product Name	Permissible Radial Load W [N]
GFS2G□FR	$W\,[N] = \frac{36}{36+Lp} \times F_0\,[N]$
GFS4G□FR	$W\,[N] = \frac{40}{40+Lp} \times F_0\,[N]$
GFS5G□FR	$W\,[N] = \frac{50}{50+Lp} \times F_0\,[N]$

◇When End of Shaft being Driven is Supported by a Bearing

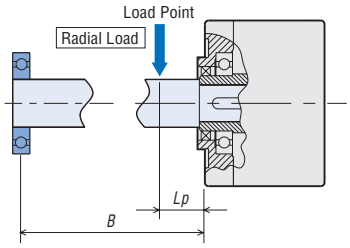

Product Name	Permissible Radial Load W [N]
GFS2G□FR **GFS4G□FR** **GFS5G□FR**	$W\,[N] = \frac{B}{B-Lp} \times F_0\,[N]$

Product Name	Gear Ratio	F0 [N]
GFS2G□FR	**5, 10**	570
	15 - 200	630
GFS4G□FR	**5, 10**	1000
	15 - 200	1500
GFS5G□FR	**5, 10**	1080
	15, 20	1550
	30 - 200	1800

- A number indicating the gear ratio is specified where the box □ is located within the product name.

Accessories (Sold Separately)

●Cable System Configuration

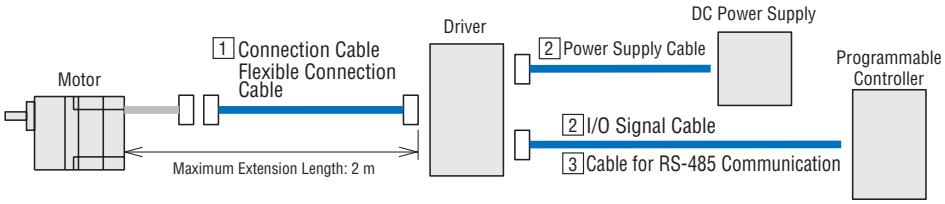

1 Connection Cables, Flexible Connection Cables

These cables are used to connect the motor and the driver. When using after extending the cables included with the product, the overall length of the cables should not exceed 2 m. Use the flexible connection cable in applications where the cable is bent and flexed.

●Product Line

◇Connection Cables

CC02BLH　CC02AXH2

Output Power [W]	Product Name	Length [m]
15	CC02BLH	1.5
30		
50		
100	CC02AXH2	

◇Flexible Connection Cables

CC02BLHR　CC02BLH2R

Output Power [W]	Product Name	Length [m]
15	CC02BLHR	1.5
30		
50		
100	CC02BLH2R	

●Dimensions (Unit: mm)

◇CC02BLH / CC02BLHR

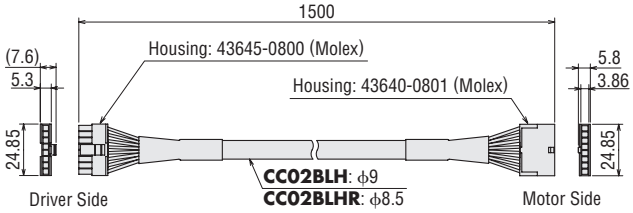

◇CC02AXH2 / CC02BLH2R

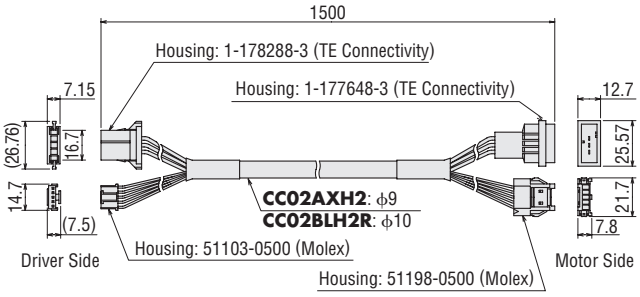

2 Power Supply Cable and I/O Signal Cable Set (For 15 W, 30 W, 50 W)

Power supply cable is used to connect the driver and the power supply. I/O signal cable is used to connect the driver and programmable controller. Cables come as a set of power supply cable and I/O signal cable.

●Product Line

Power Supply Cable

I/O Signal Cable

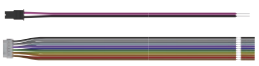

Length [m]	Driver Type	Product Name
0.3	Analogue Setting Type RS-485 Communication Type	LHS003CC
	Digital Setting Type	LHS003CD
1	Analogue Setting Type RS-485 Communication Type	LHS010CC
	Digital Setting Type	LHS010CD

●Dimensions (Unit: mm)

◇Power Supply Cable

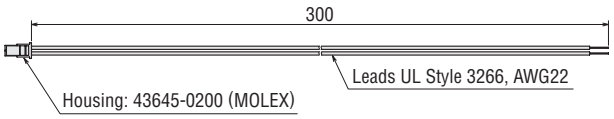

◇I/O Signal Cable

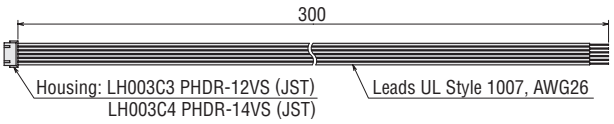

3 Cables for RS-485 Communication Set

This cable is used to connect the driver and the master device.

Length [m]	Type	Product Name
3	For RS-485 Communication Type	**CC030-RS**

Dimensions (Unit: mm)

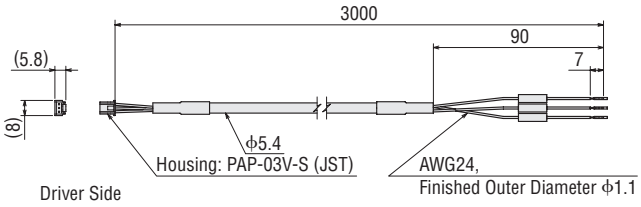

This cable is used to connect two drivers.

Length [m]	Type	Product Name
0.15	For RS-485 Communication Type	**LH0015-RWN**

Dimensions (Unit: mm)

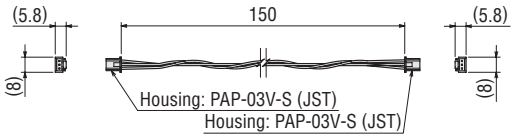

Flexible Couplings

This is a clamp type coupling for connecting the motor and gearhead shaft with a driven shaft.

- It can be used on a round shaft type as well.
  Please select a coupling with an inner diameter that matches the motor shaft's diameter.

MCL Couplings

Applicable Product	Load Type	Coupling Type
BLHM015	Uniform Load	**MCL20**
	Impact Load	
BLHM230	Uniform Load	**MCL30**
	Impact Load	
BLHM450	Uniform Load	**MCL40**
	Impact Load	**MCL55**
BLHM5100	Uniform Load	**MCL55**
	Impact Load	

Motor / Gearhead Mounting Brackets

Dedicated mounting brackets are convenient for installing and securing motors and gearheads.

Product Name	Applicable Product
SOL0B	**BLHM015K-□**
SOL0M3	**BLHM015K-A**
SOL2M4	**BLHM230KC □-□, BLHM230KC-A**
SOL4M6	**BLHM450KC □-□, BLHM450KC-A**
SOL5M8	**BLHM5100KC □-□, BLHM5100KC-A**

- A number indicating the gear ratio is specified where the box □ is located in the product name.
  For the elecromagnetic brake type **M** is entered where the box □ is located in the product code.

DIN Rail Mounting Plates

Use these mounting plates to mount the driver to a DIN rail.

Product Line

Product Name	Applicable Product
MADP01	15 W, 30 W, 50 W Drivers
MADP02	100 W Driver

External Speed Potentiometer

Features

- A Potentiometer that can adjust speed and torque.
- Easy installation
  Simply insert it into the installation hole without using any tools.
  It can also be removed easily.
- Easy wiring
  It uses terminal blocks. It requires no soldering for connecting lead wires.
  This improves the work efficiency of the wiring.

Front Face

Rear Face

Product Line

Product Name
PAVR2-20K

The following items are included with the product.
External Speed Potentiometer, Operating Manual

Note

- When connecting the potentiometer with an I/O signal cable, attach crimp terminals to the I/O signal cable.

Specifications

Resistance: 0 to 20 kΩ
Rated Power: 0.05 W
Resistance Variation Characteristics: B curve

•Applicable Lead Wire Size

AWG22 to 16 (0.3 to 1.25 mm^2)

Related Products

Brushless DC motor for DC power supply
BLV Series

Battery-powered operation is possible and communication control is available.

- Output 200 W / 400 W
- Motor with electromagnetic brake available
- Supports battery power
- Supports software **MEXE02**
- Supports RS-485 communication

For details, check the Oriental Motor website or contact the Oriental Motor sales office.

http://www.orientalmotor.eu

Safety Precautions

- To ensure correct operation, carefully read the Operating Manual before using it.
- The products listed in this catalogue are for industrial use and for built-in component. Do not use for any other applications.

- The price of all products listed in this catalogue does not include the consumption tax etc.
- For details of the products, please contact the nearest dealer, sales office or the following "Order Support Center" or "Customer Support Center".
- ***Orientalmotor*** is registered trademark or trademark of Oriental Motor in Japan and other countries.

Orientalmotor

These products are manufactured at plants certified with the international standards **ISO 9001** (for quality assurance) and **ISO 14001** for systems of environmental management).

Specifications are subject to change without notice. This catalogue was published in March 2024.

ORIENTAL MOTOR (EUROPA) GmbH

European Headquarters
Schiessstraße 44
40549 Düsseldorf, Germany
Tel: 0211 5206700 Fax: 0211 52067099

Spanish Office
C/Caléndula 93 - Ed. E - Miniparc III
28109 El Soto de La Moraleja,
Alcobendas (Madrid), Spain
Tel: +34 918 266 565

ORIENTAL MOTOR (UK) LTD.

UK Headquarters
Unit 5, Faraday Office Park,
Rankine Road, Basingstoke,
Hampshire RG24 8AH, U.K.
Tel: +44 1256 347090 Fax: +44 1256 347099

ORIENTAL MOTOR ITALIA s.r.l.

Italy Headquarters
Via XXV Aprile 5
20016 Pero (MI), Italy
Tel: +39 2 93906346 Fax: +39 2 93906348

ORIENTAL MOTOR SWITZERLAND AG

Switzerland Headquarters
Badenerstrasse 13
5200 Brugg AG, Switzerland
Tel: +41 56 560 50 45 Fax: +41 56 560 50 47

ORIENTAL MOTOR (FRANCE) SARL

France Headquarters
56, Rue des Hautes Pâtures
92000 Nanterre, France
Tel: +33 1 47 86 97 50 Fax: +33 1 47 82 45 16

Customer Service Center
(Support in German & English)

00800 22 55 66 22*
Mon-Thu: 08:00 - 16:30 CET
Friday: 08:00 - 15:00 CET
*Free Call Europe

info@orientalmotor.de

WWW.ORIENTALMOTOR.EU

EN | DE | UK | IT | FR | ES

UK/032024/VERS04

Printed in Germany.